St. Croix County Jail - Huber Center Visitation Area Remodel

Commission Number 3.2015141.01

Construction Documents 04/25/2016

PROJECT DIRECTORY

OWNER
ST. CROIX COUNTY
ST. CROIX COUNTY
GOVERNMENT CENTER
1101 CARMICHAEL RD
HUDSON, WI 54016
T 715.386.4600

ARCHITECT
BWBR
380 ST. PETER STREET
SUITE 600
SAINT PAUL, MN 55102
T 651.222.3701
F 651.222.8961

MECHANICAL & ELECTRICAL
KARGES-FAULCONBRIDGE, INC.
400 SOUTH 2ND ST
SUITE 115
HUDSON, WI 54016
T 715.942.1110
F 715.318.0219

TECHNOLOGY
ELERT & ASSOCIATES
140 S. 3RD ST
STILLWATER, MN 55082
T 651.430.2772
F 651.430.2661

STRUCTURAL
ERICKSEN ROED & ASSOCIATES
2550 UNIVERSITY AVENUE WEST
SUITE 201-S
SAINT PAUL, MN 55114
T 651.251.7570
F 651.251.7578

WISCONSIN TIMOTHY J. SESSIONS A-9183 ARCHITECT

SEAL & CERTIFICATES

I HEREBY CERTIFY THAT THE PORTION OF THE TECHNICAL SUBMISSION DESCRIBED BELOW WAS PREPARED BY ME OR UNDER MY DIRECT SUPERVISION AND RESPONSIBLE CHARGE. I AM A DULY LICENSED ARCHITECT UNDER THE LAWS OF THE STATE OF WISCONSIN.

TIMOTHY J. SESSIONS
ARCHITECT
04/25/2016
DATE 4/25/16

WISCONSIN RANDY P. CHRISTENSON E-38440 ST. CROIX FALLS WI. PROFESSIONAL ENGINEER

SEAL & CERTIFICATES

I HEREBY CERTIFY THAT THE PORTION OF THE TECHNICAL SUBMISSION DESCRIBED BELOW WAS PREPARED BY ME OR UNDER MY DIRECT SUPERVISION AND RESPONSIBLE CHARGE. I AM A DULY LICENSED PROFESSIONAL ENGINEER UNDER THE LAWS OF THE STATE OF WISCONSIN.

RANDY P. CHRISTENSON
MECHANICAL ENGINEER
04/25/2016
DATE 4/25/16

WISCONSIN MARK E. SVENKESON E-33474-006 ROSEVILLE MINN. PROFESSIONAL ENGINEER

SEAL & CERTIFICATES

I HEREBY CERTIFY THAT THE PORTION OF THE TECHNICAL SUBMISSION DESCRIBED BELOW WAS PREPARED BY ME OR UNDER MY DIRECT SUPERVISION AND RESPONSIBLE CHARGE. I AM A DULY LICENSED PROFESSIONAL ENGINEER UNDER THE LAWS OF THE STATE OF WISCONSIN.

MARK E. SVENKESON
ELECTRICAL ENGINEER
04/25/2016
DATE 4/25/16

NOTE: ELECTRICAL ENGINEER'S SIGNATURE IS FOR DIVISION 26 ONLY

NO CERTIFICATION IS REQUIRED FOR THE TECHNOLOGY DRAWINGS, AS THEY DO NOT INCLUDE LIFE SAFETY COMPONENTS.

WISCONSIN MICHAEL A. DeSUTTER 30296 INDEPENDENCE, MN PROFESSIONAL ENGINEER

SEAL & CERTIFICATES

I HEREBY CERTIFY THAT THE PORTION OF THE TECHNICAL SUBMISSION DESCRIBED BELOW WAS PREPARED BY ME OR UNDER MY DIRECT SUPERVISION AND RESPONSIBLE CHARGE. I AM A DULY LICENSED PROFESSIONAL ENGINEER UNDER THE LAWS OF THE STATE OF WISCONSIN.

MICHAEL A DESUTTER
STRUCTURAL ENGINEER
04/25/2016
DATE 4/25/16

SHEET INDEX

FRONT END

CD Issue	Sheet Number	Sheet Name
■	100	TITLE SHEET & SHEET INDEX
■	101	LOCATION MAP AND GENERAL NOTES
■	101.CO	FIRST LEVEL - CODE PLAN
R	110	OVERALL PHASING PLAN (FOR REFERENCE ONLY)
■	111	FIRST LEVEL - PHASING PLAN
■	150	PLAN GENERAL NOTES
■	151	SYMBOLS LEGENDS

STRUCTURAL

CD Issue	Sheet Number	Sheet Name
■	290	GENERAL STRUCTURAL NOTES - 1
■	291	GENERAL STRUCTURAL NOTES - 2
■	293	CMU WALL DETAILS

ARCHITECTURAL

CD Issue	Sheet Number	Sheet Name
■	401.DE	FIRST LEVEL - DEMOLITION PLAN
■	401.FL	FIRST LEVEL - FLOOR PLAN
■	401.FN	FIRST LEVEL - FINISH PLAN
■	401.RC	FIRST LEVEL - REFLECTED CEILING PLAN
■	450	PARTITION TYPES
■	520	OPENING SCHEDULE & DOOR AND FRAME TYPES
■	600	MOUNTING HEIGHTS
■	601	1/4" PLANS AND INTERIOR ELEVATIONS

MECHANICAL

CD Issue	Sheet Number	Sheet Name
■	700.P	PLUMBING PLANS - UNDERGROUND
■	701.P	PLUMBING PLANS - FIRST FLOOR
■	760	PLUMBING DETAILS
■	761	PLUMBING SCHEDULE & ISOMETRICS
■	801.DH	HVAC DEMOLITION PLAN
■	801.H	HVAC PLAN
■	860	HVAC DETAILS
■	861	HVAC DETAILS
■	862	HVAC DETAILS
■	870	MECHANICAL SCHEDULES

	NOT ISSUED
■	ISSUED
R	ISSUED FOR REFERENCE ONLY
N	ISSUED AS NOTED

ELECTRICAL

CD Issue	Sheet Number	Sheet Name
■	900.1	ELECTRICAL PLAN GENERAL NOTES
■	900.2	ELECTRICAL SYMBOLS AND ABBREVIATIONS
■	901.D	ELECTRICAL DEMOLITION PLAN
■	901.L	ELECTRICAL LIGHTING PLAN
■	901.P	ELECTRICAL POWER PLAN
■	970	ELECTRICAL LUMINAIRE SCHEDULES

SECURITY

CD Issue	Sheet Number	Sheet Name
■	SC000	SECURITY - INDEX SHEET
■	SC201	SECURITY - FIRST FLOOR
■	SC201.D	SECURITY - FIRST FLOOR - DEMOLITION PLAN
■	SC500	SECURITY - DETAILS AND SECURITY SCHEDULES

Copyright BWBR

HUBER CENTER
VISITATION AREA REMODEL
St. Croix Country Jail
Hudson, Wisconsin

B|W|B|R
380 St. Peter Street, Suite 600
Saint Paul, MN 55102
651.222.3701 bwbr.com

Name Timothy J Sessions
Date 04/25/2016
Reg. No. 9193-S

I hereby certify that this plan, specification or report was prepared by me or under my direct supervision and that I am a duly Licensed Architect under the laws of the State of Wisconsin

Date 04/25/2016
Issued for CD ISSUE
Drawn BT
Comm. No. 3.2015141.01

Sheet Title
TITLE SHEET & SHEET INDEX

Sheet No.
100

4/25/2016 9:15:53 AM
This document may be an electronic file or may be printed from an electronic file provided to the user. It is the sole responsibility of the user to ensure that the content and quality is consistent with the content and quality of the paper document on file at BWBR.

LOCATION MAP

REFERENCE PLAN

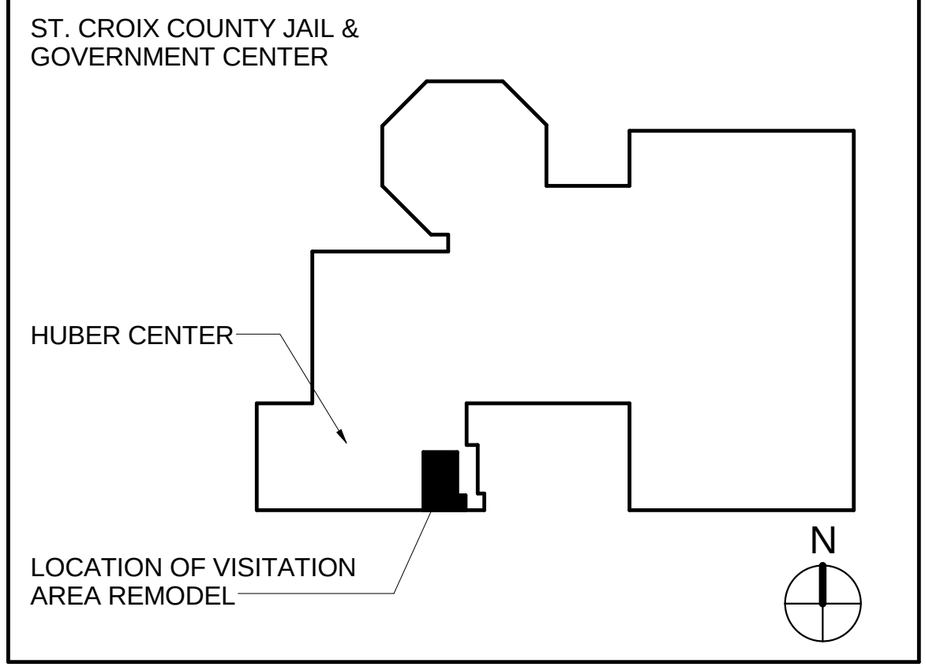

GENERAL NOTES:

1. THE ARCHITECTURAL DRAWINGS SHOW PRINCIPAL AREAS AND LIMITS OF CONSTRUCTION WHERE WORK MUST BE ACCOMPLISHED UNDER THIS CONTRACT. INCIDENTAL WORK MAY BE NECESSARY IN AREAS NOT SHOWN ON ARCHITECTURAL DRAWINGS DUE TO CHANGES AFFECTING ELECTRICAL, MECHANICAL AND PLUMBING ALONG WITH OTHER SYSTEMS. THIS INCIDENTAL WORK SHALL BE PART OF THIS CONTRACT, AND ALL TRADES SHALL INSPECT THESE AREAS, ASCERTAIN WORK REQUIRED AND DO THE WORK IN ACCORDANCE OF CONTRACT REQUIREMENTS AT NO ADDITIONAL COST.

2. CONTRACTORS SHALL VISIT THE SITE DURING BIDDING TO BECOME FAMILIAR WITH THE EXISTING CONDITIONS. THE GENERAL CONTRACTOR SHALL LOCATE, INSPECT AND FIELD VERIFY ALL EXISTING CONDITIONS, DIMENSIONS AND ELEVATIONS PRIOR TO DEMOLITION AND CONSTRUCTION. NOTIFY ARCHITECT IMMEDIATELY OF ANY DISCREPANCIES.

3. DO NOT SCALE DRAWINGS. NOTIFY ARCHITECT IMMEDIATELY OF ANY DISCREPANCIES.

4. WHEREVER OPENINGS ARE CUT THROUGH FIRE RATED PARTITIONS, IT SHALL BE THE RESPONSIBILITY OF THE CONTRACTOR FOR WHOM THE HOLE IS CUT TO PATCH AND REPAIR ANY OPENING TO MAINTAIN THE INTEGRITY OF THE FIRE RATING.

5. GENERAL CONTRACTOR TO CHECK MECHANICAL DRAWINGS FOR EXISTING PIPES AND DUCTS FURRED IN WALLS. VERIFY SIZE AND LOCATION WITH MECHANICAL CONTRACTOR PRIOR TO PROCEEDING WITH REMODELING.

6. FIREPROOFING SHALL BE UNPIERCED. ANY SUBCONTRACTOR PENETRATING THE FIREPROOFING SHALL BE REQUIRED TO REPLACE FIREPROOFING TO THE ORIGINAL CONDITION AND FIRE RATING, AT THE SUBCONTRACTORS EXPENSE.

7. EQUIPMENT UNIT DIMENSIONS ARE FOR PRODUCT DESCRIPTION ONLY, VERIFY SIZE WITH MANUFACTURER.

8. ALL DIMENSIONS PERTAINING TO MECHANICAL OR ELECTRICAL SERVICES OR EQUIPMENT SHALL BE VERIFIED WITH THE RESPECTIVE TRADE.

9. ALL CONTRACTORS THAT PENETRATE AND/OR DISTURB ANY AREAS AT EXISTING CONDITIONS SHALL PATCH AREA TO MATCH EXISTING ADJACENT AREA OR SURFACE AND PREPARE FOR SCHEDULED FINISH APPLICATION. COORDINATE WORK WITH GENERAL CONTRACTOR PRIOR TO PROCEEDING.

10. VERIFY HEIGHTS AND LOCATIONS OF ACCESS PANELS (AP) AND COORDINATE TYPES WITH TRADES WHICH REQUIRE THEM.

11. PROVIDE LINTELS AND FRAMING FOR GRILLES, LOUVERS, AND ROOF VENTS AS REQUIRED BY MECHANICAL CONTRACTOR, VERIFY SIZE AND LOCATION.

12. STRUCTURAL, MECHANICAL, AND ELECTRICAL ABBREVIATIONS AND SYMBOLS MAY DIFFER FROM ARCHITECTURAL.
SEE RESPECTIVE SECTIONS AND/OR DRAWINGS FOR DEFINITIONS.

HUBER CENTER
VISITATION AREA REMODEL
St. Croix Country Jail
Hudson, Wisconsin

B|W|B|R
380 St. Peter Street, Suite 600
Saint Paul, MN 55102
651.222.3701 bwbr.com

Name Timothy J Sessions
Date 04/25/2016
Reg. No. 9193-5

I hereby certify that this plan, specification or report was prepared by me or under my direct supervision and that I am a duly Licensed Architect under the laws of the State of Wisconsin

Issued for CD ISSUE
Date 04/25/2016
Drawn BT
Comm. No. 3.2015141.01

Sheet Title
LOCATION MAP AND GENERAL NOTES

Sheet No. 101

Copyright BWBR

4/25/2016 9:49:53 AM
This document may be an electronic file or may be printed from an electronic file provided to the user. It is the sole responsibility of the user to ensure that the content and quality is consistent with the content and quality of the paper document on file at BWBR.

CODE PLAN SYMBOLS LEGEND

FIRE RESISTANCE RATINGS				
		SMOKE PARTITION		2 HR FIRE RATED ASSEMBLY FIRE DAMPER USUALLY REQUIRED
		FIRE PARTITION 'CORRIDOR WALLS'		2 HR FIRE RATED ASSEMBLY WITH SMOKE PROTECTION FIRE AND SMOKE DAMPER USUALLY REQUIRED
		1 HR FIRE RATED ASSEMBLY 'INCIDENTAL USE'		3 HR FIRE RATED ASSEMBLY FIRE DAMPER USUALLY REQUIRED
		1 HR FIRE RATED ASSEMBLY FIRE DAMPER USUALLY REQUIRED		3 HR FIRE RATED ASSEMBLY WITH SMOKE PROTECTION FIRE AND SMOKE DAMPER USUALLY REQUIRED
		1 HR FIRE RATED ASSEMBLY WITH SMOKE PROTECTION FIRE AND SMOKE DAMPER USUALLY REQUIRED	FW·FW·FW·FW·FW·	FIRE WALL

WALL CLASSIFICATION		
		SMOKE BOUNDARY
	H·H·H·H·H·H·H·H·	HORIZONTAL EXIT
	OS·OS·OS·OS·OS·OS·	OCCUPANCY SEPARATION (FIRE BARRIER)
	S S S S S S S S S	HEALTHCARE SUITE EXIT REQUIREMENTS DEFINE SPACE. 10,000 SF MAX PATIENT TREATMENT SUITE. 5,000 SF MAX PATIENT SLEEPING SUITE.

MEANS OF EGRESS		
	EA	EXIT ACCESS
	EX	EXIT
	ED	EXIT DISCHARGE

AREA CLASSIFICATION	
	EGRESS PATH SURROUNDING SYMBOLS INDICATE RATING AND DAMPER REQUIRMENTS
	EXIT PASSAGEWAY SURROUNDING SYMBOLS INDICATE RATING AND DAMPER REQUIREMENTS
	SHAFT SURROUNDING SYMBOLS INDICATE RATING AND DAMPER REQUIRMENTS. FIRE DAMPER REQUIRED AT BOTTOM OF SHAFT
	INCIDENTAL USE SURROUNDING SYMBOLS INDICATE RATING AND DAMPER REQUIRMENTS SPACE REQUIRED TO LIMIT TRANSFER OF SMOKE CLOSER, LATCH & GASKETS REQUIRED

NOT ALL SYMBOLS MAY BE USED ON EACH PLAN.

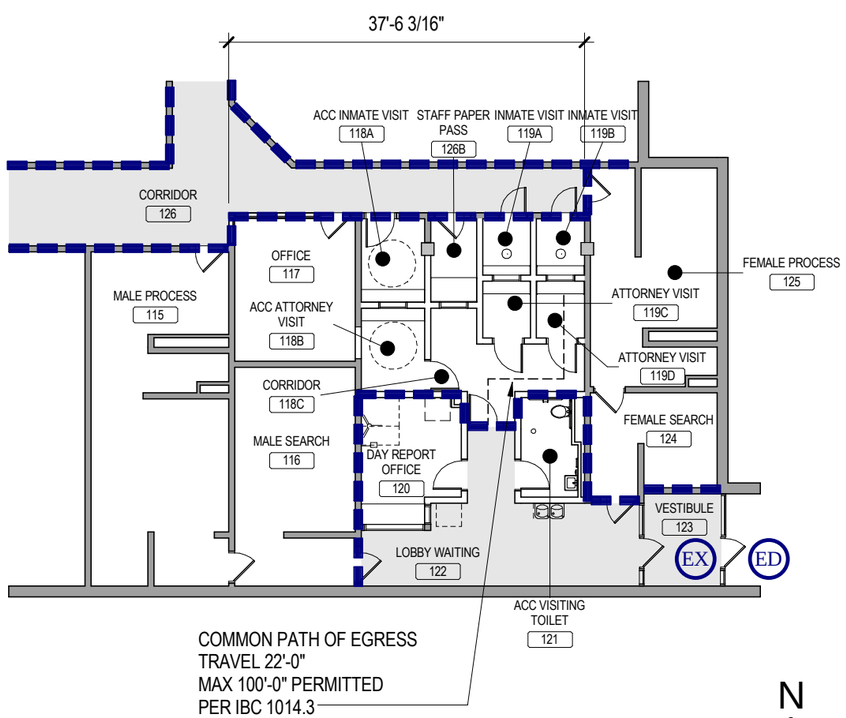

1C / 101.CO FIRST LEVEL - CODE PLAN
1/16" = 1'-0"

CODE SUMMARY - REMODELING

BUILDING DOCUMENTATION	
BUILDING CODE	2009 IBC

1. OCCUPANCY CLASSIFICATION(S)

OCCUPANCIES	I-3, FULLY SPRINKLED (CONDITION 2)	
OCCUPANCY LOAD	GREATER THAN 50	
CHANGE OF OCCUPANCY?		NO
SEPARATED OCCUPANCIES		NO
FIRE BARRIER RATING(S)	N/A	

2. TYPE(S) OF CONSTRUCTION

CONSTRUCTION TYPE(S)	TYPE I-B (ASSUMED)
FIREWALL RATING(S)	N/A

3. ALLOWABLE AREA (IF CHANGE OF OCCUPANCY) N/A

4. ACTUAL AREA (IF CHANGE OF OCCUPANCY) N/A

5. BUILDING HEIGHT (IF CHANGE OF OCCUPANCY) N/A

6. INTERIOR FINISH CLASSIFICATIONS

SPACE TYPE	WALLS & CEILINGS	FLOORING
ROOMS	C	CLASS- 1
CORRIDORS	A	CLASS- 1

FIRE-RESISTIVE REQUIREMENTS		
BUILDING ELEMENT	RATING (HRS)	TEST
EXTERIOR BEARING WALLS	2	N/A (EXISTING)
INTERIOR BEARING WALLS	*1	N/A (EXISTING)
EXTERIOR NON-BEARING WALLS	0	N/A (EXISTING)
STRUCTURAL FRAME (COLUMNS)	*1	N/A (EXISTING)
STRUCTURAL FRAME (GIRDERS)	*1	N/A (EXISTING)
INTERIOR PARTITIONS - NON-BEARING	SEE PLAN	N/A (EXISTING)
SHAFT ENCLOSURES	N/A	N/A (EXISTING)
FLOORS - CEILING/FLOORS	2	N/A (EXISTING)
ROOFS - CEILING/FLOORS	1	N/A (EXISTING)
EXTERIOR DOORS AND WINDOWS	0	N/A (EXISTING)

*REDUCED RATING OF 1HR PER TABLE 601, FOOTNOTE 'a' WHERE SUPPORTING ONLY ROOF THE ROOF.

PROJECT DESCRIPTION
INTERIOR RENOVATION OF VISITATION AREA WITHIN JAIL FACILITY

HUBER CENTER
VISITATION AREA REMODEL
St. Croix Country Jail
Hudson, Wisconsin

BWBR
380 St. Peter Street, Suite 600
Saint Paul, MN 55102
651.222.3701 bwbr.com

Name Timothy J Sessions
Date 04/25/2016
Reg. No. 9193-5

I hereby certify that this plan, specification or report was prepared by me or under my direct supervision and that I am a duly Licensed Architect under the laws of the State of Wisconsin

Issued for CD ISSUE
Date 04/25/2016
Drawn BT
Comm. No. 3.2015141.01

Sheet Title FIRST LEVEL - CODE PLAN
Sheet No. 101.CO

Copyright BWBR

4/25/2016 9:49:54 AM
This document may be an electronic file or may be printed from an electronic file provided to the user. It is the sole responsibility of the user to ensure that the content and quality is consistent with the content and quality of the paper document on file at BWBR.

4/25/2016 9:49:54 AM
This document may be an electronic file or may be printed from an electronic file provided to the user. It is the sole responsibility of the user to ensure that the content and quality is consistent with the content and quality of the paper document on file at BWBR.

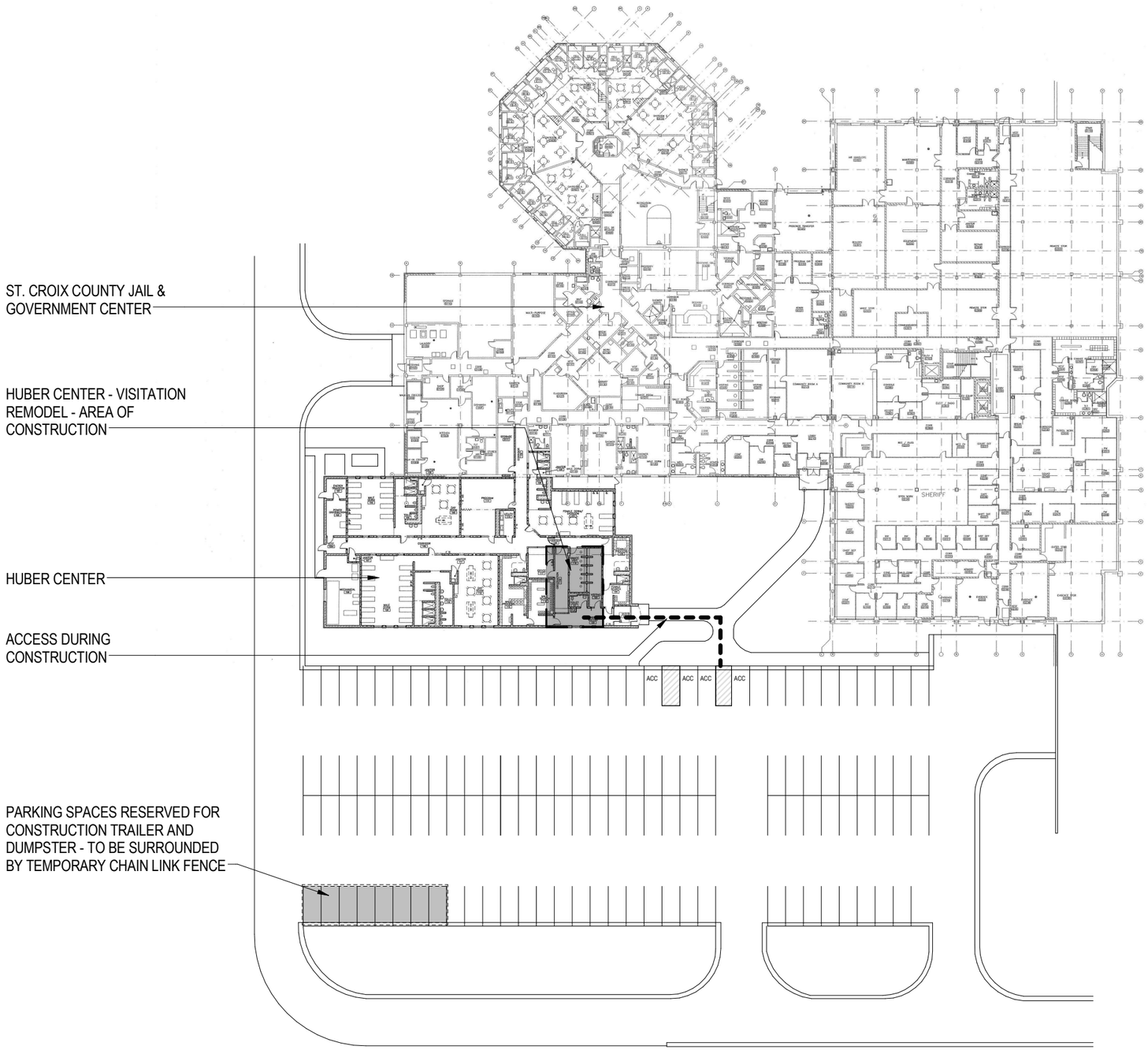

1C / 110 SITE PHASING DIAGRAM - FOR REFERENCE ONLY
1" = 60'-0"

N

Copyright BWBR

Sheet No. 110

Sheet Title OVERALL PHASING PLAN (FOR REFERENCE ONLY)

Comm. No. 3.20151141.01

Drawn BT

Issued for CD ISSUE

Date 04/25/2016

I hereby certify that this plan, specification or report was prepared by me or under my direct supervision and that I am a duly Licensed Architect under the laws of the State of Wisconsin

Name Timothy J. Sessions

Date 04/25/2016

Reg. No. 9193-5

B|W|B|R
380 St. Peter Street, Suite 600
Saint Paul, MN 55102
651.222.3701 bwbr.com

HUBER CENTER
VISITATION AREA REMODEL

St. Croix Country Jail
Hudson, Wisconsin

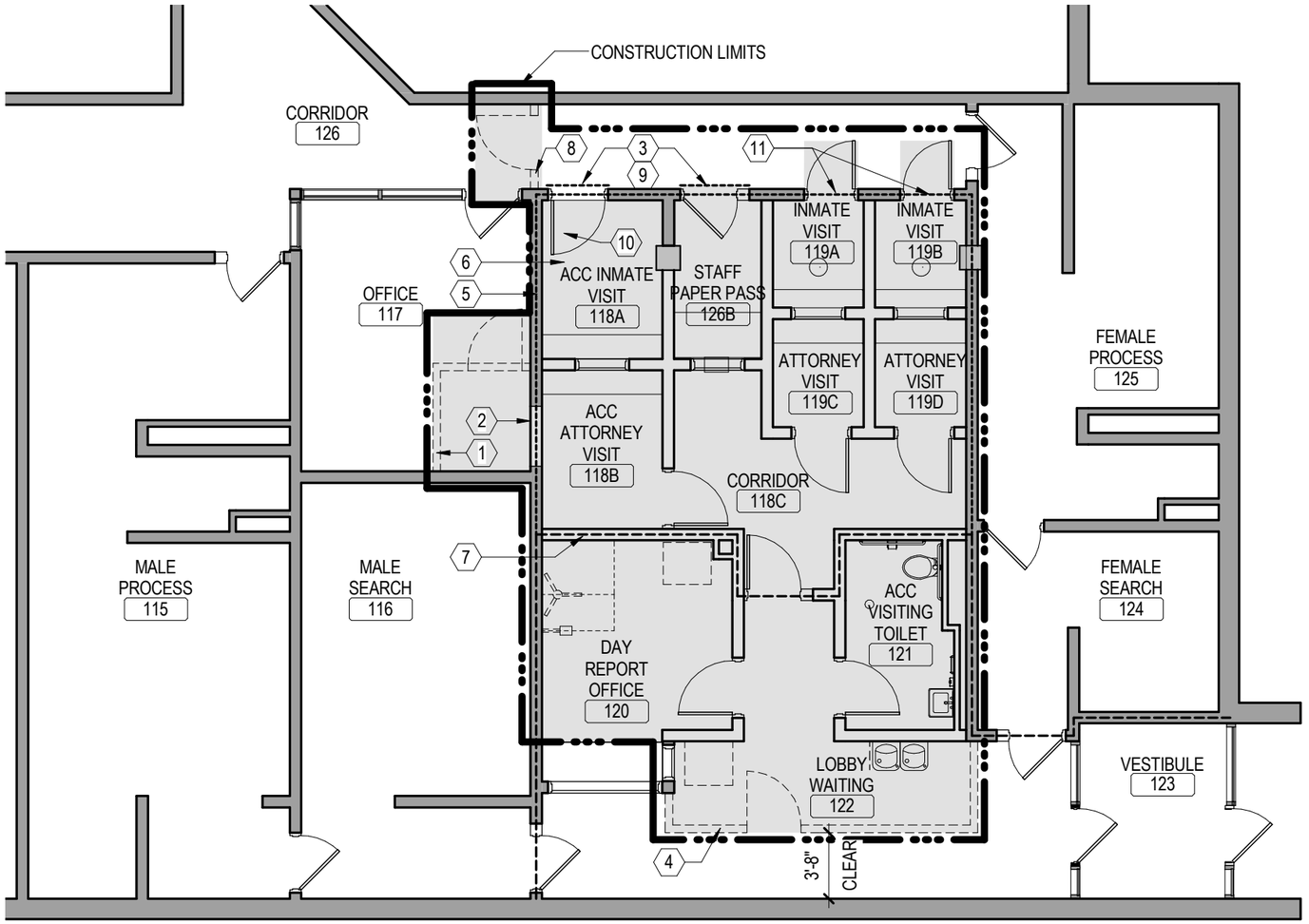

PHASING PLAN KEYED NOTES

THE SEQUENCE OF CONSTRUCTION SHALL OCCUR IN THE FOLLOWING ORDER.

1. CONSTRUCT TEMPORARY PARTITION.
2. REMOVE EXISTING DOOR AND INFILL EXISTING DOOR OPENING WITH 8" CMU PARTITION TYPE.
3. 12 GA. STEEL PLATE TO BE TACK WELDED TO FRAME OF EXISTING DOORS.
4. CONSTRUCT A TEMPORARY PARTITION WITH LOCKABLE ACCESS DOOR DURING CONSTRUCTION.
5. DEFINE EXTENT OF TEMPORARY SECURE PERIMETER DURING CONSTRUCTION - INDICATED BY DASHED LINE.
6. SHADED REGION INDICATES AREA OF DEMOLITION AND CONSTRUCTION. SEE DEMOLITION PLAN AND FLOOR PLAN.
7. LOCATION OF SECURE PERIMETER AS ESTABLISHED BY CONSTRUCTION.
8. TEMPORARY PARTITION TO BE CONSTRUCTED IN CORRIDOR 126.
9. REMOVE STEEL PLATE, GRIND FRAME SMOOTH AND PAINT TO MATCH EXISTING DOOR FRAMES.
10. PLACE SCHEDULED DOOR PANEL, EXISTING FRAME TO REMAIN.
11. CREATE OPENINGS IN EXISTING MASONRY WALL FOR SCHEDULED DETENTION DOORS.

NOTE: NOT ALL KEYED NOTES MAY BE USED ON EACH PLAN

1C / 111 FIRST LEVEL - PHASING PLAN
1/8" = 1'-0"

N

HUBER CENTER
VISITATION AREA REMODEL
St. Croix Country Jail
Hudson, Wisconsin

B|W|B|R
380 St. Peter Street, Suite 600
Saint Paul, MN 55102
651.222.3701 bwbr.com

Name Timothy J. Sessions
Date 04/25/2016
Reg. No. 9193-5

I hereby certify that this plan, specification or report was prepared by me or under my direct supervision and that I am a duly Licensed Architect under the laws of the State of Wisconsin

Issued for CD ISSUE
Date 04/25/2016
Drawn BT
Comm. No. 3.2015141.01

Sheet Title FIRST LEVEL - PHASING PLAN
Sheet No. 111

Copyright BWBR

4/25/2016 9:49:55 AM
This document may be an electronic file or may be printed from an electronic file provided to the user. It is the sole responsibility of the user to ensure that the content and quality is consistent with the content and quality of the paper document on file at BWBR.

DEMOLITION GENERAL NOTES

1. GENERAL CONTRACTOR SHALL COORDINATE ALL DEMOLITION WORK, PHASING AND SEQUENCING WITH THE OWNER. ANY INFORMATION REGARDING SEQUENCING PROVIDED IN THESE DOCUMENTS IS FOR ARCHITECT - OWNER PLANNING PURPOSES ONLY, UNLESS NOTED OTHERWISE.
2. GENERAL CONTRACTOR SHALL BE RESPONSIBLE FOR COORDINATING WITH ALL TRADES FOR THE DEMOLITION WORK REQUIRED FOR THIS PROJECT.
3. WHERE PARTITIONS ARE INDICATED TO BE REMOVED, REMOVE PARTITION ALONG WITH ALL ITEMS CONTAINED WITHIN, INCLUDING DOORS, FRAMES, HARDWARE, SIDELIGHTS, WINDOWS, MECHANICAL AND ELECTRICAL EQUIPMENT, ETC. TO STRUCTURE ABOVE, UNLESS NOTED OTHERWISE.
4. WHERE FLOOR FINISH IS INDICATED TO BE DEMOLISHED, REMOVE FINISH TO FLOOR SLAB AS REQUIRED AND PREPARE SLAB SURFACE FOR SCHEDULED FINISHES WITHIN AREA TO BE REMODELED, UNLESS NOTED OTHERWISE. SEE FINISH PLAN FOR EXISTING FLOOR FINISHES TO REMAIN UNDISTURBED.
5. WHERE CEILING IS INDICATED TO BE DEMOLISHED, REMOVE CEILING SUSPENSION SYSTEM ALONG WITH ALL ASSOCIATED MECHANICAL AND ELECTRICAL ITEMS, UNLESS NOTED OTHERWISE. SEE MECHANICAL AND ELECTRICAL DRAWINGS FOR EXTENT OF CONDUIT, PIPING AND DUCTWORK DEMOLITION WITHIN AREA TO BE REMODELED.
6. WHERE INDICATED, REMOVE ALL WALL/PARTITION EXISTING FINISHES AND PREPARE THE SURFACES FOR SCHEDULED FINISHES, SEE FINISH SCHEDULE FOR FINISHES.
7. ALL DISTURBED AREAS, WALLS, PARTITIONS, FLOORS, ETC, DAMAGED BY DEMOLITION WORK SHALL BE PATCHED TO MATCH ADJACENT AREA.
8. OWNER RESERVES THE RIGHT OF FIRST REFUSAL OF ALL SALVAGED ITEMS SUCH AS: DOORS, LIGHT FIXTURES, PLUMBING FIXTURES ETC.
9. SALVAGED ITEMS SCHEDULED FOR REUSE SHALL BE CLEANED, RESTORED AND/OR REFINISHED TO LIKE NEW CONDITION, UNLESS NOTED OTHERWISE.
10. DO NOT REMOVE ANY EXISTING STRUCTURAL SUPPORT MEMBERS SUCH AS COLUMNS, BEAMS, JOISTS, LOAD-BEARING PARTITIONS ETC, UNTIL ADEQUATE PERMANENT OR TEMPORARY SUPPORT IS IN PLACE. ALL EXISTING STRUCTURAL MEMBERS SHALL BE ADEQUATELY PROTECTED, COORDINATE WITH STRUCTURAL ENGINEER.
11. SEE STRUCTURAL, MECHANICAL AND ELECTRICAL DRAWINGS FOR RELATED DEMOLITION AND PREP WORK.
12. WALL AND CEILING MOUNTED ITEMS SHOWN DASHED, SUCH AS WALL CABINETS, SHELVING, CUBICLE CURTAIN TRACKS, PROJECTION SCREENS ETC, SHALL BE REMOVED, UNLESS NOTED OTHERWISE.
13. WITHIN ALL EXISTING ROOMS/SPACES RECEIVING SCHEDULED FLOOR, OR WALL, OR CEILING FINISHES, REMOVE ALL EXISTING FLOOR, OR WALL, OR CEILING FINISHES DOWN TO THE SUBSTRATE. INCLUDE THE REMOVAL OF ALL ITEMS LOCATED WITHIN THE EXISTING FINISH REMOVALS U.N.O. PATCH AND PREP ALL SUBSTRATES TO RECEIVE SCHEDULED FINISHES. FOR ADDITIONAL INFORMATION, SEE KEYNOTED ITEMS, FINISH PLANS AND/OR SCHEDULES, STRUCTURAL, MECHANICAL AND ELECTRICAL.

FINISH PLAN GENERAL NOTES

1. ALL LOUVERS, VENTS, GRILLES AND OTHER MISC MECHANICAL AND ELECTRICAL DEVICES SHALL BE PAINTED TO MATCH SURFACE WHICH THEY APPEAR, UNLESS OTHERWISE NOTED.
2. HM FRAMES TO BE PNT2, UNLESS NOTED OTHERWISE.
3. ALL GPBD CEILINGS AND SOFFITS TO BE PNT1, UNLESS NOTED OTHERWISE.
4. WHEN MORE THAN ONE FINISH IS LISTED IN A ROOM FINISH TAG THE FIRST FINISH LISTED IS THE PRIMARY FINISH. OTHER FINISHES LISTED ARE SPECIFICALLY CALLED OUT AND ARE SHOWN IN ELEVATION.
5. REFER TO ELEV/DETAILS FOR ADDITIONAL CASEWORK AND FINISH NOTES.
6. EXISTING WALLS TO RECEIVE SCHEDULED FINISHES SHALL HAVE EXISTING FINISHES REMOVED AND SURFACES PREPARED TO RECEIVE FINISHES.
7. CONTRACTOR IS RESPONSIBLE FOR MAKING SMOOTH, FLAT JOINTS BETWEEN TRANSITION OF DIFFERENT FLOORING MATERIALS.
8. ALL FLOOR FINISHES SHALL CHANGE AT CENTERLINE OF DOOR, UNLESS NOTED OTHERWISE.
9. ALL COUNTERTOPS AND CASEWORK TO BE PLAM UNLESS NOTED OTHERWISE.
10. ALL PLAM COUNTERTOPS TO BE PLAM1, UNLESS NOTED OTHERWISE.

FLOOR PLAN GENERAL NOTES:

1. ALL DOORS AND FINISHES TO BE COMMERCIAL GRADE HOLLOW METAL WITH COMMERCIAL HARDWARE.
2. THE FOLLOWING EXISTING ITEMS WILL BE RELOCATED AND REUSED: VISITING BOOTH WINDOWS, VISITING BOOTH STOOLS (ON INMATE SIDE), DRINKING FOUNTAIN, TOILET, SINK, ALL TOILET ACCESSORIES (GRAB BARS, TOILET PAPER HOLDER, SOAP DISPENSER, PAPER TOWL HOLDER, MIRROR).
3. SEE SPECIFICATIONS FOR LINTEL DESIGN AT MASONRY OPENINGS.

REFLECTED CEILING PLAN GENERAL NOTES

1. GENERAL CONTRACTOR TO COORDINATE ALL CEILING MOUNTED EQUIPMENT SUPPORT REQUIREMENTS, LOCATIONS, DIMENSIONS, ETC WITH EQUIPMENT SUPPLIER AND OWNER, PRIOR TO INSTALLATION.
2. ALL CEILING MOUNTED ITEMS SUCH AS LIGHT FIXTURES, GRILLES, DIFFUSERS, SPEAKERS, EXIT LIGHTS, ETC SHALL BE LOCATED IN THE CENTER OF ACT/ACB PANELS, GPBD SOFFITS AND/OR PLASTER SOFFIT BAYS, UNLESS NOTED OTHERWISE. COORDINATE WITH MECHANICAL AND ELECTRICAL DRAWINGS.
3. SEE MECHANICAL DRAWINGS FOR SPRINKLER HEAD TYPES AND LOCATIONS. CENTER ALL HEADS IN ACT OR ACB UNLESS NOTED OTHERWISE.
4. AT REMODELING WORK IN EXISTING ACB SUSPENSION SYSTEM, REMOVE EXISTING PANELS, CUT AS REQUIRED FOR CONSTRUCTION AND RE-INSTALL. REPLACE ALL DAMAGED AND EXTREMELY SOILED PANELS WITH ACB TO MATCH EXISTING.

HUBER CENTER
VISITATION AREA REMODEL
St. Croix Country Jail
Hudson, Wisconsin

B|W|B|R
380 St. Peter Street, Suite 600
Saint Paul, MN 55102
651.222.3701 bwbr.com

Name Timothy J Sessions
Date 04/25/2016
Reg. No. 9193-5

I hereby certify that this plan, specification or report was prepared by me or under my direct supervision and that I am a duly Licensed Architect under the laws of the State of Wisconsin

Issued for CD ISSUE
Date 04/25/2016
Drawn BT
Comm. No. 3.2015141.01

Sheet Title PLAN GENERAL NOTES
Sheet No. 150

Copyright BWBR

4/25/2016 9:49:56 AM
This document may be an electronic file or may be printed from an electronic file provided to the user. It is the sole responsibility of the user to ensure that the content and quality is consistent with the content and quality of the paper document on file at BWBR.

DEMOLITION SYMBOLS LEGEND

X	KEYED NOTE	A	NEW GRIDLINE
	PARTITION OR WALL TO BE DEMOLISHED		
	PARTITION OR WALL TO REMAIN	A	EXISTING GRIDLINE
	DOOR, FRAME AND HARDWARE TO BE DEMOLISHED		
	DOOR, FRAME AND HARDWARE TO REMAIN		
	ALL DASHED LINES INDICATE AN ITEM TO BE REMOVED, UNLESS NOTED OTHERWISE NOTE: NOT ALL SYMBOLS MAY BE USED ON EACH PLAN		

FINISH SYMBOLS LEGEND & ABBREVIATIONS

ROOM NUMBER FLOOR FINISH(ES) BASE FINISH WALL FINISH(ES)		CPT VCT	MATERIAL CHANGE LOCATION
			MATERIAL INSTALL DIRECTION
	WALL PROTECTION	PNT	ACCENT WALL FINISH
CG	CORNER GUARD	3	FINISH KEYED NOTE

ACB	ACOUSTIC CEILING BOARD
BR	BUMPER RAIL
CC	CUBICLE CURTAIN
CG	CORNER GUARD
CPT	CARPET
CR	CRASH RAIL
CT	CERAMIC TILE
CTB	CERAMIC TILE BASE
EMAT	ENTRANCE MAT
EPNT	EPOXY PAINT
EXG	EXISTING
EXP	EXPOSED
FAF	FLUID APPLIED FLOOR
FAW	FLUID APPLIED WALL
FRP	FIBERGLASS REINFORCED PANEL
GPBD	GYPSUM BOARD
HR	HANDRAIL
HM	HOLLOW METAL
HWD	HARDWOOD
HWDB	HARDWOOD BASE
INTB	INTEGRAL BASE
LVT	LUXURY VINYL TILE
PF	PANEL FABRIC
PLAM	PLASTIC LAMINATE
PNT	PAINT
PWC	PROTECTIVE WALLCOVERING
RB	RESILIENT BASE
RF	RESILIENT FLOORING
SLR	SEALER
SSM	SOLID SURFACE MATERIAL
VAR	VARIES
VCT	VINYL COMPOSITION TILE
VT	VINYL TILE
VWC	VINYL WALLCOVERING
WT	WINDOW TREATMENT

FLOOR PLAN SYMBOLS LEGEND

	WALL	M100	EQUIPMENT NUMBER
	EXISTING WALL TO REMAIN		WORKING POINT
101A	DOOR	1A 500	INTERIOR SECTION REFERENCE TAG
	EXISTING DOOR AND FRAME TO REMAIN	1A 500	EXTERIOR SECTION REFERENCE TAG
101B	INTERIOR BORROWED LIGHT	1A 605 2A	INTERIOR ELEVATION REFERENCE TAG
8'-0"	DIMENSION LINE NOMINAL	1A 510	EXTERIOR ELEVATION REFERENCE TAG
8'-0"	EXTENDED DIMENSION LINE, NOMINAL	1A 620	PLAN DETAIL REFERENCE TAG
OFFICE 101	ROOM NAME AND NUMBER		
100'-0"	FLOOR ELEVATION	X	KEYNOTE
	REVISION CLOUD	*	GROMMET
		PR1	REVISION TAG
A	NEW GRIDLINE	A	EXISTING GRIDLINE
A3 D	WALL TAG		

REFLECTED CEILING PLAN SYMBOLS LEGEND

	GPBD CEILING / SOFFIT		2' X 4' LIGHT FIXTURE
	ACB CEILING SYSTEM		2' X 2' LIGHT FIXTURE
	EXISTING ACB CEILING SYSTEM		1' X 4' LIGHT FIXTURE
	SECURITY METAL PLANK CEILING		PENDANT STRIP LIGHT FIXTURE
	IV TRACK		PENDANT STRIP LIGHT FIXTURE
	CUBICLE CURTAIN TRACK		RECESSED LIGHT FIXTURE
	ACCESS PANEL		WALL SCONCE LIGHT FIXTURE
9'-0" AFF ACB	CEILING ELEVATION AND FINISH		MECHANICAL LINEAR SUPPLY GRILLE
	MECHANICAL SUPPLY GRILLE		MECHANICAL RADIANT HEAT PANEL
	MECHANICAL RETURN GRILLE		

NOTE: NOT ALL SYMBOLS MAY BE USED ON EACH PLAN

HUBER CENTER
VISITATION AREA REMODEL
St. Croix Country Jail
Hudson, Wisconsin

BWBR
380 St. Peter Street, Suite 600
Saint Paul, MN 55102
651.222.3701 bwbr.com

Name Timothy J. Sessions
Date 04/25/2016
Reg. No. 9193-5

I hereby certify that this plan, specification or report was prepared by me or under my direct supervision and that I am a duly Licensed Architect under the laws of the State of Wisconsin

Issued for CD ISSUE
Date 04/25/2016

Drawn BT
Comm. No. 3.2015141.01

Sheet Title SYMBOLS LEGENDS
Sheet No. 151

Copyright BWBR

4/25/2016 9:49:57 AM
This document may be an electronic file or may be printed from an electronic file provided to the user. It is the sole responsibility of the user to ensure that the content and quality is consistent with the content and quality of the paper document on file at BWBR.

This document may be an electronic file or may be printed from an electronic file provided to the user. It is the sole responsibility of the user to ensure that the content and quality is consistent with the content and quality of the paper document on file at BWBR.

1 2 3

A B C

GENERAL STRUCTURAL NOTES

These notes supplement the Specifications. Refer to the Specifications for additional requirements.

1. DESIGN CRITERIA:

1.1. BUILDING CODES USED FOR DESIGN:

1.1.1. IBC 2009 with Wisconsin amendments.

1.2. STRUCTURAL TESTS AND SPECIAL INSPECTIONS:

1.2.1. Special inspections shall be performed by an independent testing agency according to IBC Chapter 17.

Table 1704.4 - Concrete Construction
Table 1704.5.1 - Level 1 Masonry Construction
Table 1704.4 - Post-installed Anchors

1.2.2. Qualifications of special inspectors and frequency of tests and inspections shall be as defined in "Guideline Program for Structural Testing and Special Inspections," 5th Edition, Council of American Structural Engineers of Minnesota (available at http://www.mn-sea.org/).

2. DESIGN STRENGTHS:

2.1. CONCRETE:

2.1.1. All concrete shall be stone aggregate unless noted. See Specifications for additional durability requirements.

2.1.2. Minimum concrete 28-day compressive strength shall be as follows:

Class	f'c (PSI)	Type	Add'l Remarks	Location
C	3000	NWT		Footings

2.2. CONCRETE REINFORCEMENT:

Deformed Bars: FY = 60 KSI ASTM A615

2.3. STRUCTURAL STEEL:

Angles and Plates FY = 36 KSI ASTM A36

2.4. MASONRY:

Assembly Compressive Strength: f'm = 1,500 PSI
Masonry Grout: f'g = 3,000 PSI
Deformed Bars: FY = 60 KSI ASTM A615

3. FOUNDATIONS AND EARTHWORK:

3.1. EXCAVATIONS:

3.1.1. Should any questionable conditions be encountered during excavation, notify Owner's Representative immediately.

3.1.2. Provide a minimum of 6 inches of granular fill below all interior slabs-on-grade.

3.1.3. The slab-on-grade design is based on a modulus of subgrade reaction of 150 PCI.

3.2. FOOTINGS:

3.2.1. The foundation design is based on a total load net soil pressure:
Wall Footings: 2000 PSF

3.2.2. All footing excavations shall be inspected, prior to concrete placement, by the Geotechnical Engineer to verify suitable bearing material of capacity as specified.

3.2.3. Notify the Owner's representative when additional excavation is required to reach suitable bearing material.

4. CONCRETE:

4.1. REFERENCES:

ACI 315	ACI Detailing Manual
ACI 318	Building Code Requirements for Reinforced Concrete
CRSI MSP	Manual of Standard Practice
AWS D1.4	Structural Welding Code - Reinforcing Steel
CRSI	Recommended Practice for Placing Reinforcing Bars

4.2. REINFORCING STEEL:

4.2.1. The reinforcing steel Contractor shall fabricate all reinforcement and furnish all accessories, chairs, spacer bars and supports necessary to secure the reinforcement unless shown otherwise on the plans and/or details.

4.2.2. Concrete reinforcement shall be placed according to ACI and CRSI "Recommended Practice for Placing Reinforcing Bars".

WISCONSIN
MICHAEL A. DeSUTTER
30296
INDEPENDENCE, MN
PROFESSIONAL ENGINEER
4-25-16

STRUCTURAL SHEET INDEX

- • INDICATES DRAWINGS THAT ARE BEING ISSUED.
- •S INDICATES DRAWINGS THAT ARE BEING ISSUED AND SIGNED FOR THE FIRST TIME.
- ▲ INDICATES DRAWINGS THAT HAVE BEEN ISSUED ON SMALL SHEETS OR WRITE UP.

SHEET #	ISSUE: 2016-041-25 CD ISSUE							SHEET TITLE
290	•S							GENERAL STRUCTURAL NOTES - 1
291	•S							GENERAL STRUCTURAL NOTES - 2
293	•S							CMU WALL DETAILS

HUBER CENTER
VISITATION AREA REMODEL
St. Croix Country Jail
Hudson, Wisconsin

BWBR
380 St. Peter Street, Suite 600
Saint Paul, MN 55102
651.222.3701 bwbr.com

ERA ERICKSEN ROED & ASSOCIATES
Structural Engineers
2550 University Avenue West
Suite 201-S
Saint Paul, MN 55114-1904
651.251.7570 www.eraeng.com
ERA Comm#: 2016-123

Issued for: CD ISSUE
Date: 4/25/2016
Drawn: TED
Comm. No.: 3.2015141.01
Sheet Title: GENERAL STRUCTURAL NOTES - 1
Sheet No.: 290

Copyright BWBR / ERA

This document may be an electronic file or may be printed from an electronic file provided to the user. It is the sole responsibility of the user to ensure that the content and quality is consistent with the content and quality of the paper document on file at BWBR.

5. MASONRY:

5.1. REFERENCES:

IBC 2009
ACI 530 Building Code Requirements for Concrete Masonry Structures
ACI 530.1 Specification for Concrete Masonry Construction

5.2. CONCRETE MASONRY UNITS:

5.2.1. Concrete masonry units shall conform to ASTM C 90, normal weight.

5.2.2. Structural walls shall be comprised of Plain Double Corner units, Open End ('A' shaped) units, or Double Open End ('H' shaped) units. Stretcher units shall not be used in structural walls.

5.2.3. Store concrete masonry units off the ground, under cover, and in a dry location.

5.2.4. Autoclave Aerated Concrete (AAC) masonry shall not be used.

5.3. MORTAR:

5.3.1. Mortar shall conform to the requirements of ASTM C 270.

5.3.2. Mortar for other structural walls shall be Type M or S.

5.3.3. Face shells and webs of bed joints shall be fully mortared for all starter courses, columns, pilasters, and cells to be grouted.

5.3.4. Head joints shall be mortared a minimum distance from each face equal to the face shell thickness of the unit.

5.3.5. Do not wet concrete masonry before laying up or grouting.

5.4. GROUT:

5.4.1. Vertical cells to be grouted shall be aligned, and unobstructed openings for grout provided.

5.4.2. Grout shall conform to the requirements of ASTM C 476 and have a slump between 8 and 11 inches.

5.4.3. Masonry walls shall be grouted with lift heights not exceeding 5 feet. Pour heights shall not exceed 5 feet. Consolidate lifts exceeding 1 foot in height by mechanical vibration and reconsolidate after

5.5. REINFORCING:

5.5.1. Masonry walls shall have ladder type horizontal bed joint reinforcing consisting of W1.7 (9 gage) hot-dipped galvanized wire conforming to ASTM A 951. Bed joint reinforcing shall be spaced at 16" OC vertically.

5.5.2. Provide 5/8" cover to bed joint reinforcement for exterior walls or walls below grade. Provide 1/2" cover to bed joint reinforcement for other walls.

5.5.3. Secure vertical reinforcement with bar positioners at bar splices, top and bottom of walls, and at intervals not exceeding 192 bar diameters.

5.5.4. Lap splices shall be in accordance with the table shown in the drawings unless noted otherwise.

5.5.5. Provide a minimum of 1 1/2" cover to deformed bar reinforcing.

5.5.6. When using fine grout, provide a minimum of 1/4" clear distance between reinforcing bars and the face of any masonry unit. When using course grout, provide 1/2" clear distance.

5.5.7. Contractor shall provide Shop Drawings showing lengths, sizes, bending details, and locations of reinforcing steel, wall elevations, and setting diagrams for embedded items.

5.6. LINTELS:

5.6.1. Provide 24" deep minimum solid masonry below all lintel bearing locations.

5.6.2. Masonry lintels shall be comprised of Lintel Block. Reinforcing bars shall be chaired and tied.

6. STEEL:

6.1. CONNECTIONS:

6.1.1. Connections shall be as shown on the drawings.

6.2. NEW WORK IN CONJUNCTION WITH EXISTING CONSTRUCTION:

6.2.1. VERIFICATION: The Contractor shall verify, by field check, all sizes, dimensions, elevations, locations, etc. of elements of the existing construction which are relative to the new construction.

6.2.2. DIMENSIONS: All dimensions involving new Work tying into or governed by existing construction shall be field checked by the Contractor and furnished to the Subcontractors prior to fabrication of any Work. For the first shop drawing submitted.

6.2.3. ASSUMPTIONS: The Engineer has made assumptions concerning the soundness of the existing buildings and these assumptions are that this building was designed an constructed in conformity with good design and construction practices. The Contractor shall take extraordinary precautions concerning preservation of the building during demolition and new construction Work. Further, he shall agree to assume all responsibility for the preservation of this property.

6.2.4. NOTIFICATION: The Contractor shall notify the Architect/Engineer immediately of any discrepancies between construction documents and actual field conditions.

6.2.5. HOLES: All holes through existing construction shall be core drilled or saw cut.

6.3. GENERAL:

6.3.1. These drawings do not include necessary components for construction safety.

6.3.2. The structural design is based only on the building in its completed state. Contractors and their subs shall take whatever precautions are necessary to withstand all horizontal and vertical loadings that may be encountered during the construction prior to completion of the building.

6.3.3. During construction, the Contractor may encounter existing conditions which are not now known or are at variance with project documentation (Discovery). Such conditions may interfere with new construction or required protection and/or support of existing Work during construction, or may consist of damage or deterioration to structural materials or components which could jeopardize the structural integrity of the building(s).

6.3.4. The Contractor shall notify the Engineer of all Discoveries that the Contractor believes may interfere with proper execution of the Work or jeopardize the structural integrity of the building prior to proceeding with Work related to such Discoveries.

WISCONSIN
MICHAEL A. DeSUTTER
30296
INDEPENDENCE, MN
PROFESSIONAL ENGINEER
4-25-16

HUBER CENTER
VISITATION AREA REMODEL
St. Croix Country Jail
Hudson, Wisconsin

B|W|B|R
380 St. Peter Street, Suite 600
Saint Paul, MN 55102
651.222.3701 bwbr.com

Structural Engineers
2550 University Avenue West
Suite 201-S
Saint Paul, MN 55114-1904
651.251.7570 www.eraeng.com
ERA Comm#: 2016-123
ERA ERICKSEN ROED & ASSOCIATES

Issued for	Date
CD ISSUE	4/25/2016

Comm. No. 3.2015141.01
Drawn TED

Sheet Title
GENERAL STRUCTURAL NOTES - 2

Sheet No. 291

Copyright BWBR / ERA

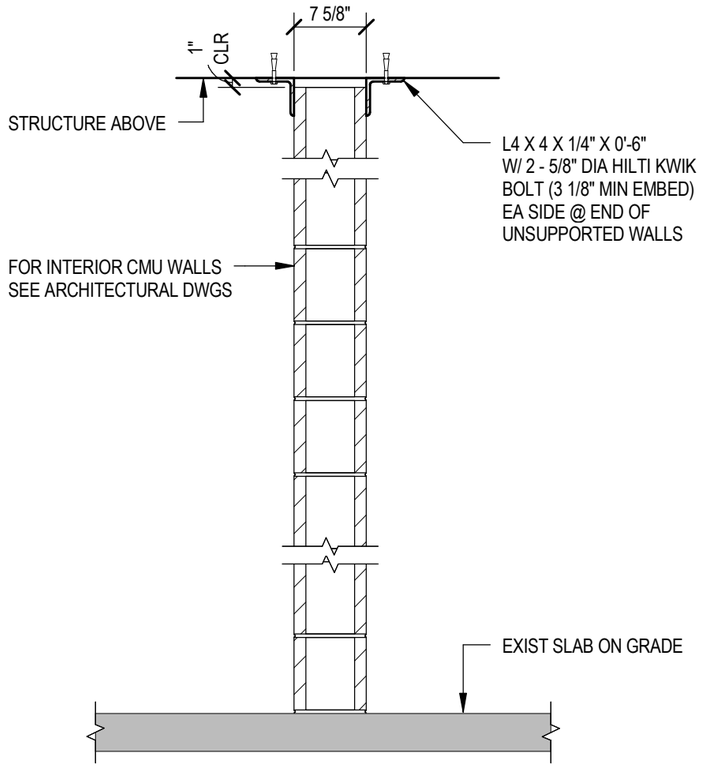

1 / 293 CMU WALL DETAIL @ MA8

3/4" = 1'-0"

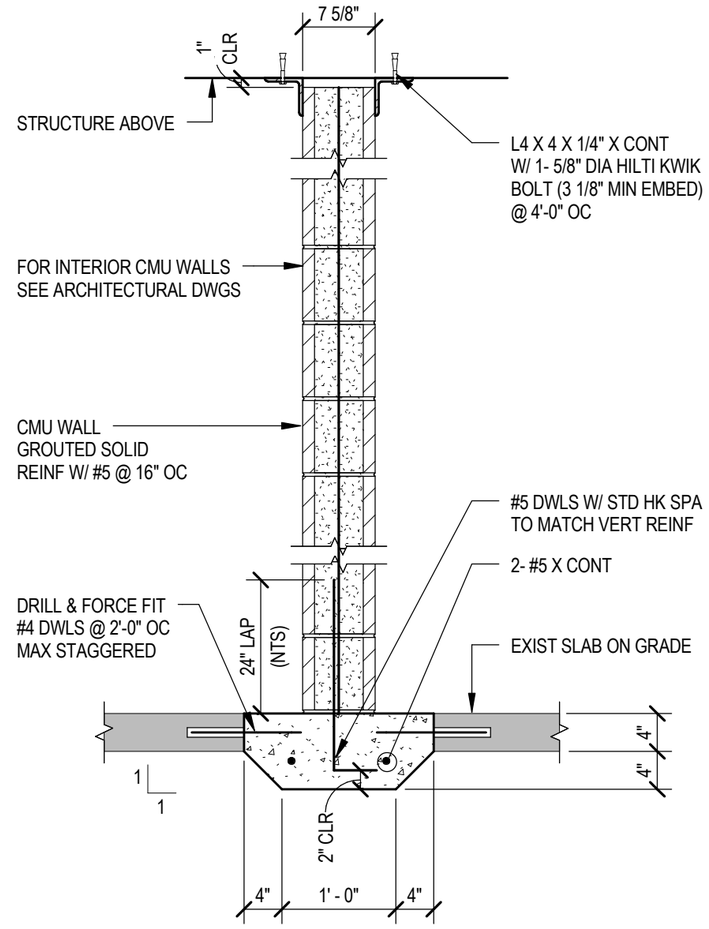

2 / 293 CMU WALL DETAIL @ MS8

3/4" = 1'-0"

HUBER CENTER
VISITATION AREA REMODEL
St. Croix Country Jail
Hudson, Wisconsin

B|W|B|R
380 St. Peter Street, Suite 600
Saint Paul, MN 55102
651.222.3701 bwbr.com

Structural Engineers
2550 University Avenue West
Suite 201-S
Saint Paul, MN 55114-1904
651.251.7570 www.eraeng.com
ERA Comm#: 2016-123
ERICKSEN ROED & ASSOCIATES

Issued for	Date
CD ISSUE	4/25/2016

Drawn TED

Comm. No. 3.2015141.01

Sheet Title CMU WALL DETAILS

Sheet No. 293

Copyright BWBR / ERA

This document may be an electronic file or may be printed from an electronic file provided to the user. It is the sole responsibility of the user to ensure that the content and quality is consistent with the content and quality of the paper document on file at BWBR.

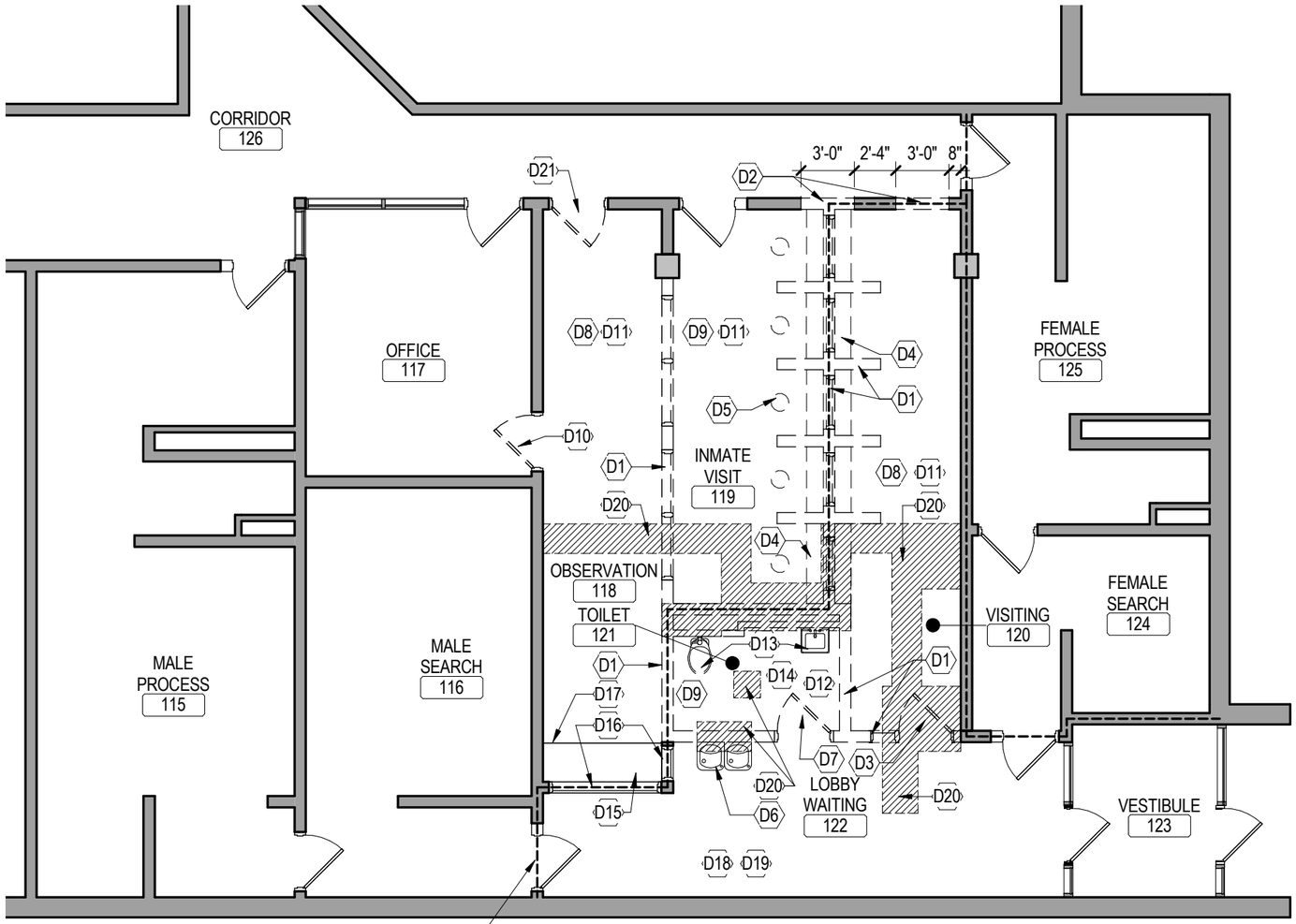

HEAVY DASHED LINE INDICATES LOCATION OF EXISTING SECURE PERIMETER WALL (8"CMU, REINFORCED, FULLY GROUTED) TO UNDERSIDE OF PLANK ABOVE

1C
401.DE
FIRST LEVEL - DEMOLITION PLAN
1/8" = 1'-0"

N

DEMOLITION PLAN KEYED NOTES

- D1 REMOVE CMU PARTITION AND INTERIOR WINDOWS, RETAIN VISITATION WINDOWS FOR RELOCATION.
- D2 REMOVE PORTION OF PARTITION, PREP OPENING FOR DOOR - SEE FLOOR PLAN AND OPENING SCHEDULE FOR ADDITIONAL INFORMATION.
- D3 REMOVE DOOR, FRAME AND HARDWARE.
- D4 REMOVE COUNTERTOP, TYPICAL.
- D5 REMOVE FLOOR MOUNTED STOOL, TYPICAL, RETAIN FOR RELOCATION. SEE FLOOR PLAN FOR RELOCATION INFORMATION.
- D6 REMOVE DRINKING FOUNTAIN, RETAIN FOR RELOCATION. SEE FLOOR PLAN FOR RELOCATION AND MECHANICAL FOR ADDITIONAL INFORMATION.
- D7 REMOVE DOOR, FRAME AND HARDWARE, RETAIN FOR RELOCATION TO ACC VISITING TOILET 121.
- D8 REMOVE ACB CEILING GRID IN THIS ROOM.
- D9 REMOVE METAL SECURITY CEILING IN THIS ROOM.
- D10 REMOVE DOOR, FRAME AND HARDWARE, RETAIN FOR RELOCATION TO DAY REPORT OFFICE 120.
- D11 REMOVE VCT FLOORING AND BASE IN THIS ROOM.
- D12 REMOVE CERAMIC TILE FLOORING AND TILE BASE IN THIS ROOM.
- D13 REMOVE PLUMBING FIXTURES, RETAIN FOR RELOCATION. SEE FLOOR PLAN FOR RELOCATION AND MECHANICAL FOR ADDITIONAL INFORMATION.
- D14 ALL WALL MOUNTED TOILET ACCESSORIES TO BE REMOVED AND RETAINED FOR RELOCATION.
- D15 EXISTING DRAWER PASS THRU TO REMAIN.
- D16 EXISTING INTERIORS WINDOWS TO REMAIN.
- D17 EXISTING COUNTER TO REMAIN.
- D18 EXISTING VCT FLOORING AND BASE TO REMAIN IN THIS ROOM.
- D19 EXISTING ACB CEILING TO REMAIN IN THIS ROOM.
- D20 SAWCUT AND REMOVE EXISTING FLOOR SLAB - INDICATED BY HATCHED REGION. COORDINATE WITH MECHANICAL AND STRUCTURAL.
- D21 REMOVE DOOR PANEL, DOOR FRAME TO REMAIN.

NOTE: NOT ALL KEYED NOTES MAY BE USED ON EACH PLAN

SEE SHEET 150 FOR GENERAL PLAN NOTES AND SHEET 151 FOR SYMBOLS

HUBER CENTER
VISITATION AREA REMODEL
St. Croix Country Jail
Hudson, Wisconsin

B|W|B|R
380 St. Peter Street, Suite 600
Saint Paul, MN 55102
651.222.3701 bwbr.com

Name Timothy J. Sessions
Date 04/25/2016
Reg. No. 9193-5

I hereby certify that this plan, specification or report was prepared by me or under my direct supervision and that I am a duly Licensed Architect under the laws of the State of Wisconsin

Issued for CD ISSUE
Date 04/25/2016

Drawn BT
Comm. No. 3.2015141.01

Sheet Title FIRST LEVEL - DEMOLITION PLAN
Sheet No. 401.DE

Copyright BWBR

4/25/2016 9:47:43 AM
This document may be an electronic file or may be printed from an electronic file provided to the user. It is the sole responsibility of the user to ensure that the content and quality is consistent with the content and quality of the paper document on file at BWBR.

This document may be an electronic file or may be printed from an electronic file provided to the user. It is the sole responsibility of the user to ensure that the content and quality is consistent with the content and quality of the paper document on file at BWBR.

4/25/2016 9:47:44 AM

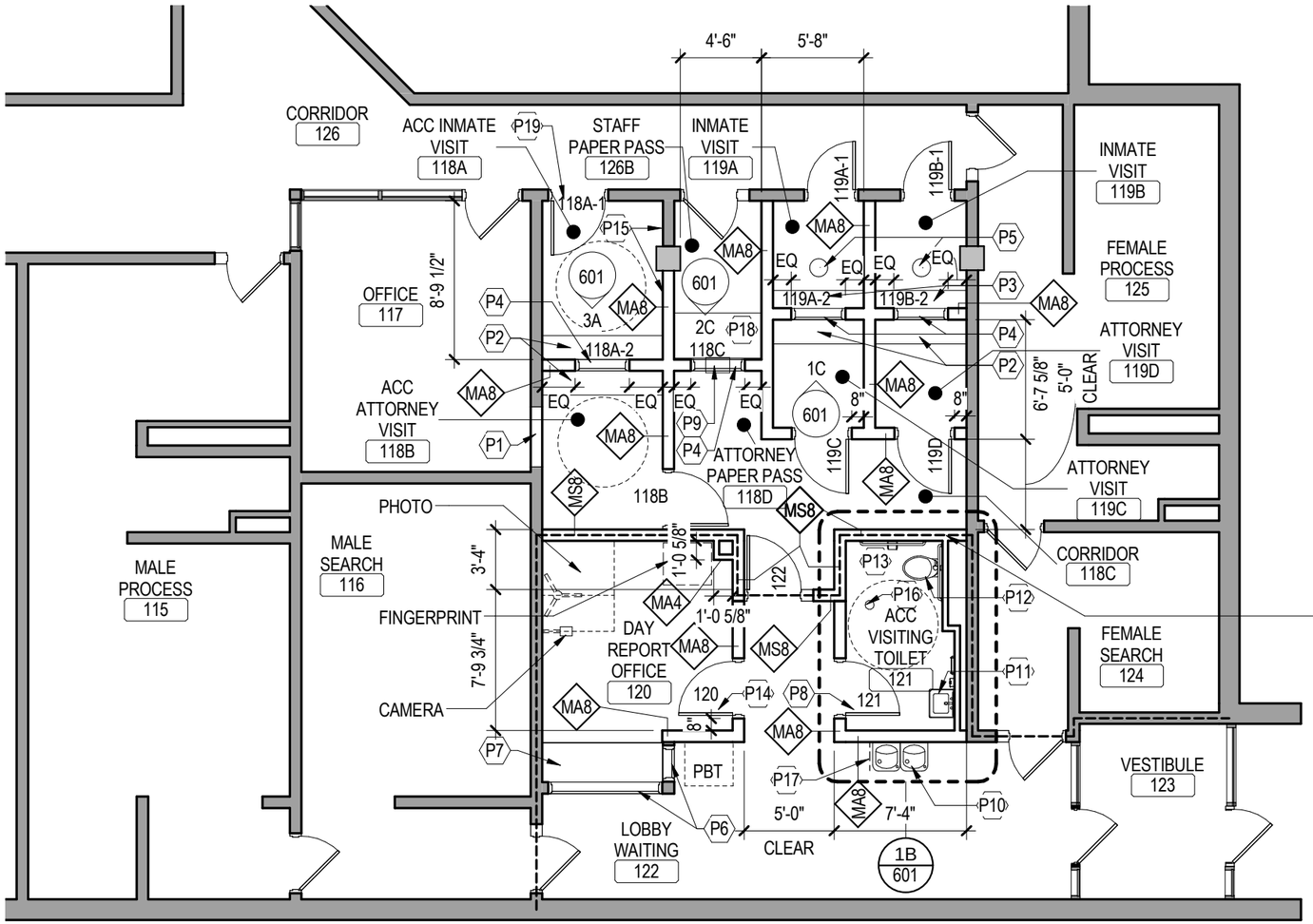

1C
401.FL
FIRST LEVEL - FLOOR PLAN
1/8" = 1'-0"

N

FLOOR PLAN KEYED NOTES

- P1 INFILL EXISTING DOOR OPENING WITH 8" CMU PARTITION TYPE.
- P2 16" DEEP PLAM COUNTERTOP AT 30" A.F.F.
- P3 12" DEEP PLAM COUNTERTOP AT 30" A.F.F.
- P4 RELOCATED VISITATION WINDOW.
- P5 RELOCATED FLOOR MOUNTED STOOL.
- P6 EXISTING INTERIOR WINDOW TO REMAIN.
- P7 EXISTING COUNTERTOP TO REMAIN.
- P8 RELOCATED HM DOOR, HARDWARE, AND FRAME FROM EXISTING TOILET ROOM.
- P9 DRAWER PAPER/PACKAGE PASS BELOW COUNTERTOP.
- P10 RELOCATED DRINKING FOUNTAIN. SEE MECHANICAL FOR ADDITIONAL INFORMATION.
- P11 RELOCATED SINK. SEE MECHANICAL FOR ADDITIONAL INFORMATION.
- P12 RELOCATED TOILET. SEE MECHANICAL FOR ADDITIONAL INFORMATION.
- P13 REINSTALL EXISTING WALL MOUNTED TOILET ACCESSORIES IN TOILET ROOM.
- P14 RELOCATED HM DOOR, HARDWARE, AND FRAME FROM EXISTING OFFICE 117.
- P15 ALIGN CMU PARTITION WITH EXISTING CMU PARTITION.
- P16 FLOOR DRAIN - SEE MECHANICAL.
- P17 CANE RAIL - SEE MOUNTING HEIGHTS AND SPECIFICATIONS. SEE DETAIL 3/601.
- P18 30" DEEP PLAM COUNTERTOP AT 30" A.F.F.
- P19 INSTALL DOOR PANEL, EXISTING FRAME TO REMAIN. SEE OPENING SCHEDULE.

NOTE: NOT ALL KEYED NOTES MAY BE USED ON EACH PLAN

SEE SHEET 150 FOR GENERAL PLAN NOTES AND SHEET 151 FOR SYMBOLS

HUBER CENTER
VISITATION AREA REMODEL
St. Croix Country Jail
Hudson, Wisconsin

BWBR
380 St. Peter Street, Suite 600
Saint Paul, MN 55102
651.222.3701 bwbr.com

Name Timothy J. Sessions
Date 04/25/2016
Reg. No. 9193-5

I hereby certify that this plan, specification or report was prepared by me or under my direct supervision and that I am a duly Licensed Architect under the laws of the State of Wisconsin

Issued for	Date
CD ISSUE	04/25/2016

Drawn BT
Comm. No. 3.2015141.01

Sheet Title FIRST LEVEL - FLOOR PLAN
Sheet No. 401.FL

Copyright BWBR

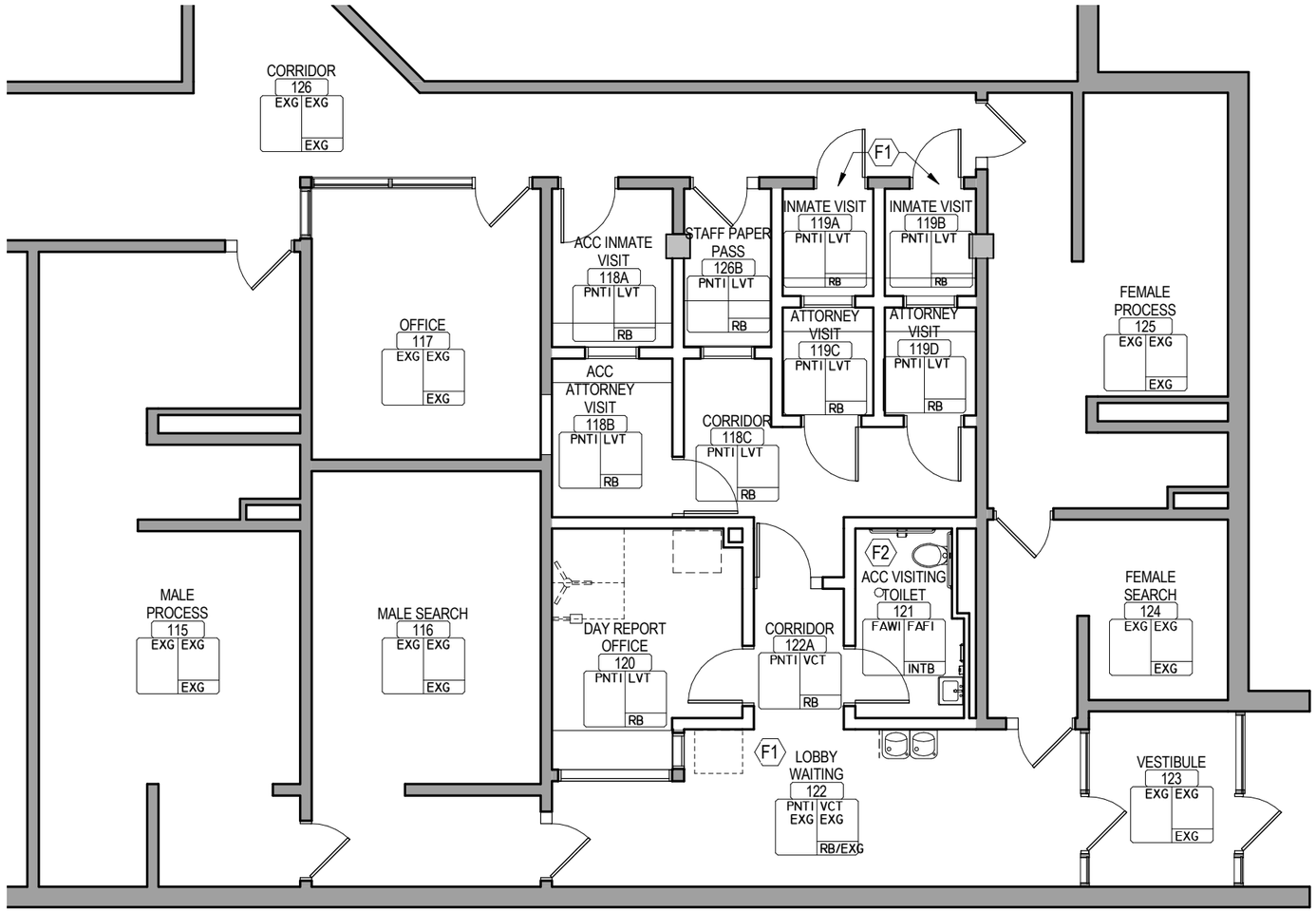

1C
401.FN
FINISH PLAN - FIRST LEVEL
1/8" = 1'-0"

FINISH PLAN KEYED NOTES

F1 PATCH TO MATCH EXISTING FLOOR FINISH.

F2 INTEGRAL BASE TO BE 4" HIGH.

NOTE: NOT ALL KEYED NOTES MAY BE USED ON EACH PLAN

FINISH SCHEDULE

ACB	CERTAINTEED, CASHMERE (TO MATCH EXISTING)
PNT1 PNT2	WALLS - S.W. EIDER WHITE 7014 (TO MATCH EXISTING) DOORS AND FRAMES - S.W. PROPER GRAY 6003 (TO MATCH EXISTING)
SECURITY METAL CEILING	BARRIERDEK SECURITY CEILING
RB	VPI LONDON GREY (TO MATCH EXISTING)
VCT	MANNINGTON COMMERCIAL 111 DALMATIAN (TO MATCH EXISTING)
PLAM1	WILSONART LAMINATE IRON LEGACY #4661-60 (TO MATCH EXISTING)
FAF1	TENANT ECO-DFS 1/8" FULL FLAKE SYSTEM, CUSTOM COLOR 20% WHITE, 20% ALPACA WHITE, 20% ANTIQUE WHITE 20% ONLINE, 10% CHARCOAL, 10% TAUPE ROCKY RIDGE (B-801) #A10836
LVT1	AMERICAN BILTRITE MFF-002 MIRRA FABRIC FUSION, GREY, 12"X24"
FAW1	TENNANT MAT WALL SYSTEM, WHITE 100

SEE SHEET 150 FOR GENERAL PLAN NOTES AND SHEET 151 FOR SYMBOLS

HUBER CENTER
VISITATION AREA REMODEL
St. Croix Country Jail
Hudson, Wisconsin

BWBR
380 St. Peter Street, Suite 600
Saint Paul, MN 55102
651.222.3701 bwbr.com

Name Timothy J. Sessions
Date 04/25/2016
Reg. No. 9193-5

I hereby certify that this plan, specification or report was prepared by me or under my direct supervision and that I am a duly Licensed Architect under the laws of the State of Wisconsin

Issued for CD ISSUE
Date 04/25/2016
Drawn BT
Comm. No. 3.2015141.01

Sheet Title FIRST LEVEL - FINISH PLAN
Sheet No. 401.FN

Copyright BWBR

4/25/2016 9:47:45 AM
This document may be an electronic file or may be printed from an electronic file provided to the user. It is the sole responsibility of the user to ensure that the content and quality is consistent with the content and quality of the paper document on file at BWBR.

This document may be an electronic file or may be printed from an electronic file provided to the user. It is the sole responsibility of the user to ensure that the content and quality is consistent with the content and quality of the paper document on file at BWBR.

4/25/2016 9:47:46 AM

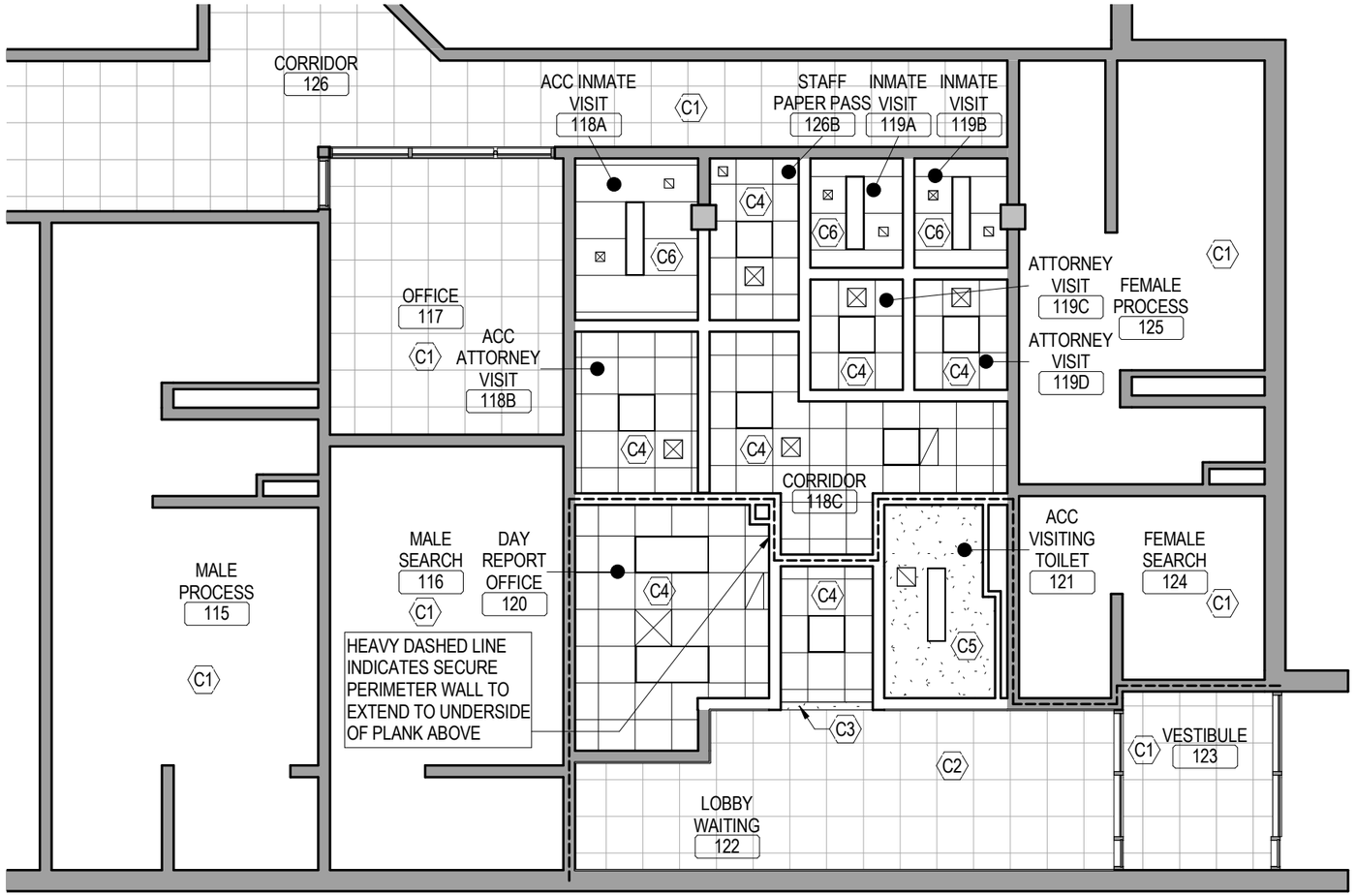

1C 401.RC FIRST LEVEL - REFLECTED CEILING PLAN
1/8" = 1'-0"

REFLECTED CEILING PLAN KEYED NOTES

- C1 EXISTING CEILING AND FIXTURES TO REMAIN.
- C2 EXISTING ACB CEILING GRID AND FIXTURES TO REMAIN, REWORK CEILING AS REQUIRED AT SCHEDULED PARTITIONS.
- C3 GPBD BULKHEAD AT 8'-10" A.F.F. SEE DETAIL 3C/401.RC. A 1/4" SEALANT JOINT IS REQUIRED WHERE THE BULKHEAD MEETS THE CMU PARTITION.
- C4 2X2 ACB CEILING AT 9'-0" A.F.F.
- C5 GPBD CEILING AT 9'-0" A.F.F.
- C6 SECURITY METAL CEILING AT 9'-0" A.F.F.

NOTE: NOT ALL KEYED NOTES MAY BE USED ON EACH PLAN

SEE SHEET 150 FOR GENERAL PLAN NOTES AND SHEET 151 FOR SYMBOLS

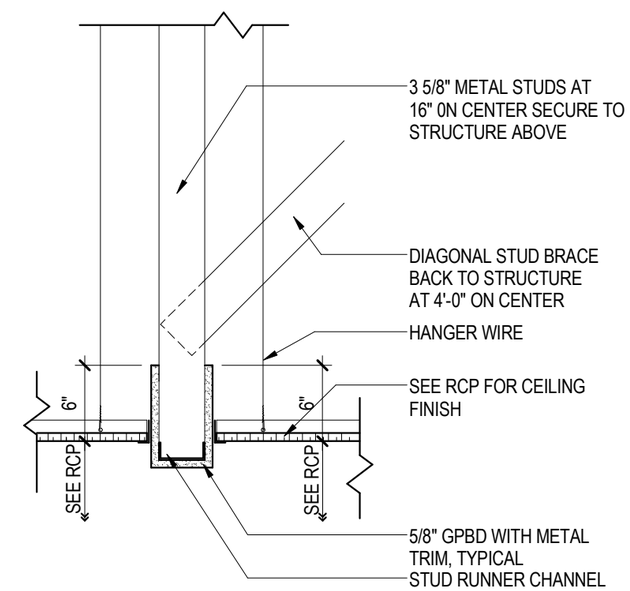

3C 401.RC SECTION DETAIL-GPBD BULKHEAD
1" = 1'-0"

N

HUBER CENTER
VISITATION AREA REMODEL
St. Croix Country Jail
Hudson, Wisconsin

BWBR
380 St. Peter Street, Suite 600
Saint Paul, MN 55102
651.222.3701 bwbr.com

Name Timothy J Sessions
Date 04/25/2016
Reg. No. 9193-5

I hereby certify that this plan, specification or report was prepared by me or under my direct supervision and that I am a duly Licensed Architect under the laws of the State of Wisconsin

Issued for CD ISSUE
Date 04/25/2016

Drawn BT
Comm. No. 3.2015141.01

Sheet Title FIRST LEVEL - REFLECTED CEILING PLAN
Sheet No. 401.RC

Copyright BWBR

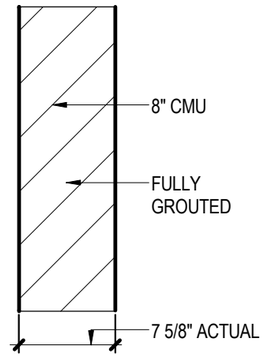

NOTE: ALL PARTITIONS FULL HEIGHT TO UNDERSIDE OF STRUCTURE

NOTE: SECURITY MASONRY WALL (MS8). FULL HEIGHT CMU. GROUTED SOLID WITH #4 VERTICAL REINFORCING BARS AT 16" O.C., TYPICAL.

MS8 450-202
UP TO A 4-HR F.R.
IBC TABLE 719.1(2) ITEM 3
STC 49-56

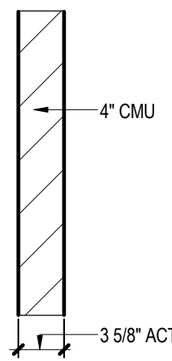

MA4 450-200
UP TO A 1-HR F.R.
IBC TABLE 719.1(2) ITEM 3
STC 41

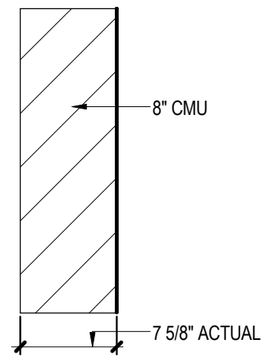

MA8 450-202
UP TO A 4-HR F.R.
IBC TABLE 719.1(2) ITEM 3
STC 49-56

1B / 450 PARTITION TYPES
1" = 1'-0"

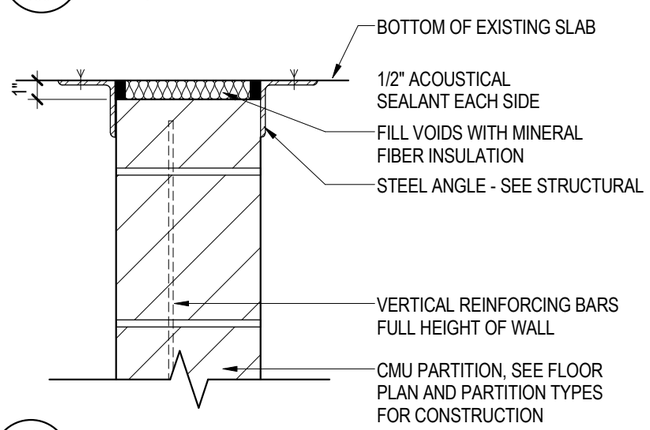

1C / 450 CMU HEAD OF WALL
1 1/2" = 1'-0"

PARTITION GENERAL NOTES

1. SEE CODE PLANS FOR REQUIRED PARTITION FIRE RATINGS.
2. CONTRACTORS TO VERIFY CONDITIONS ABOVE CEILING AT EXISTING PARTITIONS IDENTIFIED WITH FIRE/SMOKE PARTITION SYMBOLS. REPAIR CONDITIONS THAT DO NOT MEET REQUIREMENTS OF THE INDICATED FIRE/SMOKE RATING SHOWN, SUCH AS BUT NOT LIMITED TO OPENINGS IN PARTITIONS, GAPS AROUND DUCTWORK, PIPES AND CONDUIT, MISSING SMOKE DAMPERS, ETC
3. ALL PARTITIONS ARE TO EXTEND TO UNDERSIDE OF STRUCTURE.
4. WHERE PARTITIONS ARE LOCATED BELOW STRUCTURE THAT HAS A VERTICAL DEFLECTION MOVEMENT MORE THAN 1/2", PROVIDE PARTITION HEADS WITH VERTICAL MOVEMENT CAPABILITY TO MATCH THAT DEGREE OF MOVEMENT. MAINTAIN THE REQUIRED FIRE RATING OF FIRE RATED PARTITIONS FROM FLOOR TO STRUCTURE ABOVE WITH FIRE TESTED HEAD CONSTRUCTION.
5. BULKHEAD FRAMING SHALL EXTEND TO UNDERSIDE OF STRUCTURE WITH DIAGONAL STUD FRAMING BRACES AT 4'-0" ON CENTER (2 BRACES MINIMUM) WITH GYPSUM BOARD EXTENDING 6" ABOVE CEILING MINIMUM, UNLESS NOTED OTHERWISE.
6. GENERAL CONTRACTOR SHALL PROVIDE AND COORDINATE ALL IN-WALL BLOCKING FOR WALL MOUNTED CASEWORK AND EQUIPMENT SUPPLIED BY THIS CONTRACT, OWNER FURNISHED OR BY VENDORS. CONTRACTORS OPTION TO PROVIDE 3/4" FIRE TREATED PLYWOOD (PRESERVATIVE TREATED ON EXTERIOR WALLS) OR SHEET METAL BLOCKING FOR WALL MOUNTED EQUIPMENT, CASEWORK, DOOR STOPS, ACCESSORIES, ETC, UNLESS NOTED OTHERWISE.
7. FOR ALL REMODELING PROJECTS, ALL PARTITIONS NOTED AT INFILLS WITHIN, OR EXTENSIONS ONTO EXISTING PARTITIONS, ARE NOTED AS SUCH FOR INTENT ONLY. ALL EXPOSED PARTITION FACES ARE TO ALIGN.

BWBR
380 St. Peter Street, Suite 600
Saint Paul, MN 55102
651.222.3701 bwbr.com

HUBER CENTER
VISITATION AREA REMODEL
St. Croix Country Jail
Hudson, Wisconsin

Name Timothy J Sessions
Date 04/25/2016
Reg. No. 9193-5

I hereby certify that this plan, specification or report was prepared by me or under my direct supervision and that I am a duly Licensed Architect under the laws of the State of Wisconsin

Issued for CD ISSUE
Date 04/25/2016
Drawn BT
Comm. No. 3.2015141.01

Sheet Title PARTITION TYPES
Sheet No. 450

Copyright BWBR
4/25/2016 9:47:46 AM
This document may be an electronic file or may be printed from an electronic file provided to the user. It is the sole responsibility of the user to ensure that the content and quality is consistent with the content and quality of the paper document on file at BWBR.

4/25/2016 9:47:47 AM
This document may be an electronic file or may be printed from an electronic file provided to the user. It is the sole responsibility of the user to ensure that the content and quality is consistent with the content and quality of the paper document on file at BWBR.

OPENING SCHEDULE

REVISIONS	ASSOCIATED ROOMS: ROOM NAME	ASSOCIATED ROOMS: ROOM NAME	OPENING: NUMBER	OPENING: WIDTH	OPENING: HEIGHT	OPENING: ACTIVE PANEL WIDTH	PANEL INFORMATION: PANEL TYPE	PANEL INFORMATION: 2ND PANEL TYPE	PANEL INFORMATION: PANEL GLAZING	FRAME INFORMATION: FRAME TYPE	FRAME INFORMATION: FRAME GLAZING	HDW GROUP	FIRE LABEL (MIN)	GASKET	ELECTRICAL	S LABEL	COMMENTS
	ACC INMATE VISIT	CORRIDOR	118A-1	3'-0"	7'-0"		DHM-GH		FR-2	DHM-1A	NONE	D07	20 MIN	Y		Y	EXISTING FRAME TO REMAIN, DOOR TO BE 1 3/4" THICK
	ACC ATTORNEY VISIT	ACC INMATE VISIT	118A-2	3'-0"	4'-4"		NO PANEL		EXISTING	DHM-BL-1X1	NONE						RELOCATED EXISTING BORROWED LITE
	ACC ATTORNEY VISIT	CORRIDOR	118B	3'-0"	7'-0"		HM-GH		LA-1	HMM-1	NONE	11					
	STAFF PAPER PASS	ATTORNEY PAPER PASS	118C	3'-0"	4'-4"		NO PANEL		EXISTING	DHM-BL-1X1	NONE						RELOCATED EXISTING BORROWED LITE
	CORRIDOR	INMATE VISIT	119A-1	2'-8"	7'-0"		DHM-GH		FR-2	DHM-1A	NONE	D07	20 MIN	Y		Y	
	ATTORNEY VISIT	INMATE VISIT	119A-2	3'-0"	4'-4"		NO PANEL		EXISTING	DHM-BL-1X1	NONE						RELOCATED EXISTING BORROWED LITE
	CORRIDOR	INMATE VISIT	119B-1	2'-8"	7'-0"		DHM-GH		FR-2	DHM-1A	NONE	D07	20 MIN	Y		Y	
	ATTORNEY VISIT	INMATE VISIT	119B-2	3'-0"	4'-4"		NO PANEL		EXISTING	DHM-BL-1X1	NONE						RELOCATED EXISTING BORROWED LITE
	CORRIDOR	ATTORNEY VISIT	119C	3'-0"	7'-0"		HM-GH		LA-1	HMM-1	NONE	11A					
	CORRIDOR	ATTORNEY VISIT	119D	3'-0"	7'-0"		HM-GH		LA-1	HMM-1	NONE	11A					
	DAY REPORT OFFICE	CORRIDOR	120	3'-0"	7'-0"		HM-F		EXISTING	HMM-1	NONE						RELOCATED EXISTING DOOR, FRAME AND HARDWARE
	ACC VISITING TOILET	CORRIDOR	121	3'-0"	7'-0"		HM-F		EXISTING	HMM-1	NONE						RELOCATED EXISTING DOOR, FRAME AND HARDWARE
	CORRIDOR	CORRIDOR	122	3'-0"	7'-0"		DHM-NV		FR-2	DHM-1B	NONE	D03	20 MIN	Y	Y	Y	

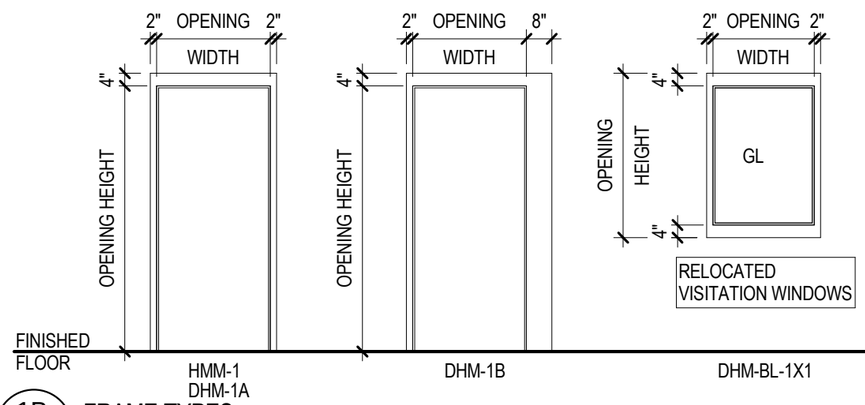

1B 520 FRAME TYPES
1/4" = 1'-0"

DOOR PANEL NAMING

NOTE: ACTUAL PANELS MAY VARY FROM DESCRIPTIONS BELOW, REFER TO PANEL TYPE ELEVATIONS

HM-GF

PANEL PREFIXES

DHM-	DETENTION HOLLOW METAL
HM-	HOLLOW METAL

PANEL SUFFIXES

F	FLUSH
NV	NARROW VISION
GH	HALF GLASS

DOOR FRAME NAMING

NOTE: ACTUAL FRAMES MAY VARY FROM DESCRIPTIONS BELOW, REFER TO FRAME TYPE ELEVATIONS

HMS-2

FRAME PREFIXES

DHM-	DETENTION HOLLOW METAL
DHM-BL-	DHM BORROWED LIGHT
HMM-	HOLLOW METAL MASONRY

FRAME SUFFIXES

1	DOOR ONLY
1X1	1 LIGHT WIDE AND 1 LIGHT HIGH

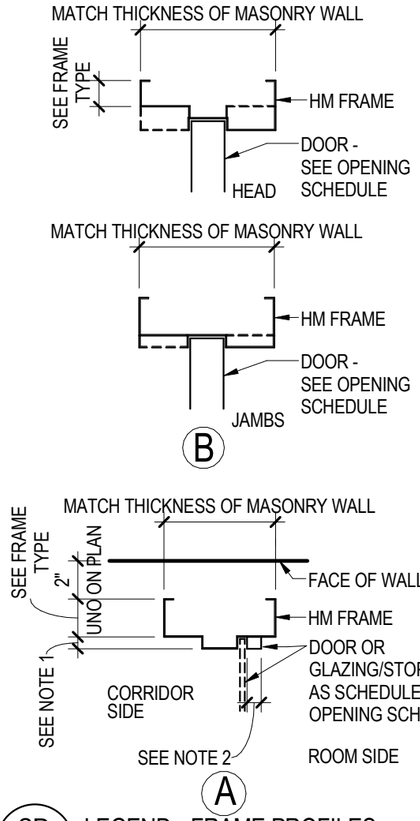

3B 520 LEGEND - FRAME PROFILES
1 1/2" = 1'-0"

FRAME PROFILE NOTES:

1. 5/8" AT 20 MINUTE FIRE RATED FRAMES AND NON-RATED FRAMES, 3/4" AT FIRE RATED FRAMES OF 45 MINUTES AND ABOVE.
2. 5/8" AT 20 MINUTE FIRE RATED FRAMES AND NON-RATED FRAMES, 1" AT FIRE RATED FRAMES OF 45 MINUTES AND ABOVE.

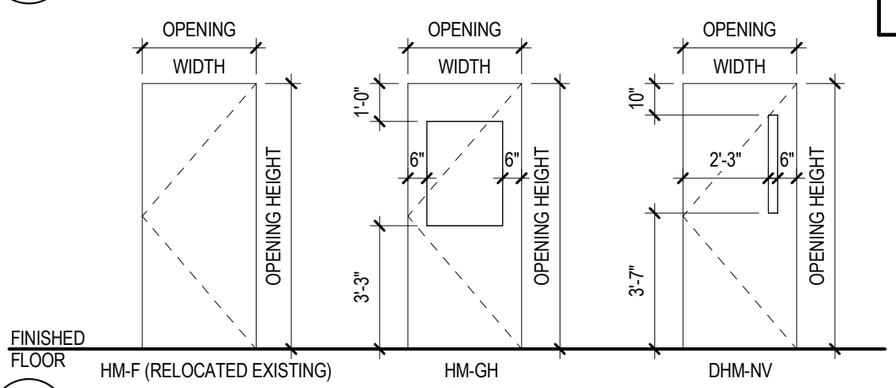

1C 520 PANEL TYPES
1/4" = 1'-0"

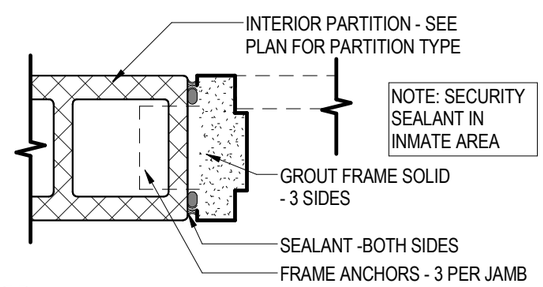

2C 520 TYP. HM JAMB AT CMU WALL
1 1/2" = 1'-0"

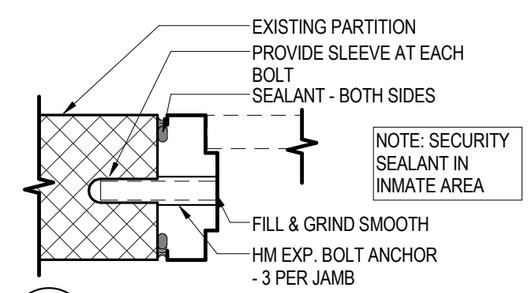

3C 520 TYP. HM JAMB AT EXIST CMU WALL
1 1/2" = 1'-0"

HUBER CENTER
VISITATION AREA REMODEL
St. Croix Country Jail
Hudson, Wisconsin

BWBR
380 St. Peter Street, Suite 600
Saint Paul, MN 55102
651.222.3701 bwbr.com

Name Timothy J. Sessions
Date 04/25/2016
Reg. No. 9193-5

I hereby certify that this plan, specification or report was prepared by me or under my direct supervision and that I am a duly Licensed Architect under the laws of the State of Wisconsin

Issued for	Date
CD ISSUE	04/25/2016

Drawn BT
Comm. No. 3.20151141.01

Sheet Title
OPENING SCHEDULE & DOOR AND FRAME TYPES

Sheet No. 520

Copyright BWBR

This document may be an electronic file or may be printed from an electronic file provided to the user. It is the sole responsibility of the user to ensure that the content and quality is consistent with the content and quality of the paper document on file at BWBR.

4/25/2016 4:33:11 PM

LAVATORIES , EWC AND DRINKING FOUNTAINS

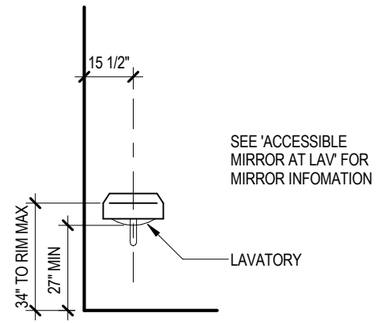

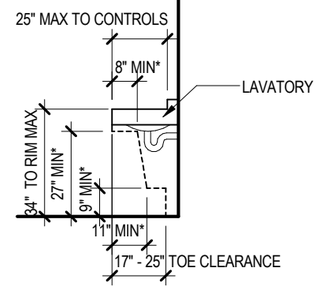

*KNEE CLEARANCE MINIMUMS
KNEE CLEARANCE MAXIMUM AT 9" AFF IS 25"

ACCESSIBLE LAVATORY

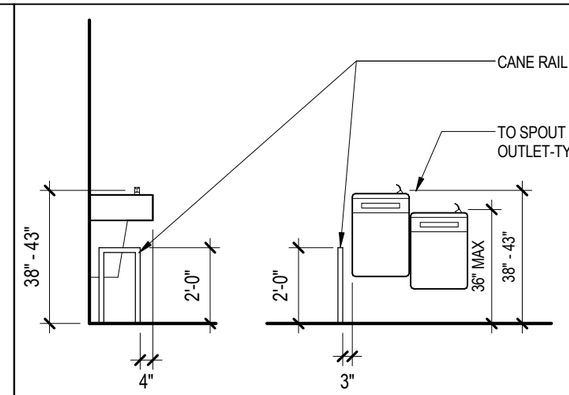

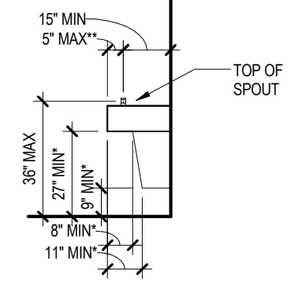

* KNEE CLEARANCE MINIMUMS
KNEE CLEARANCE MAXIMUM AT 9" AFF IS 25"
** 3 1/2" MAX FOR PARALLEL APPROACH

ACCESSIBLE AND STD EWC WALL MOUNTED

WATER CLOSETS, URINALS AND FLUSH RIM SINK

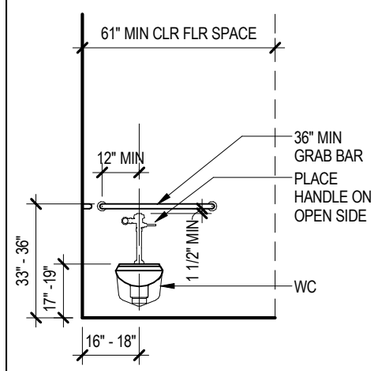

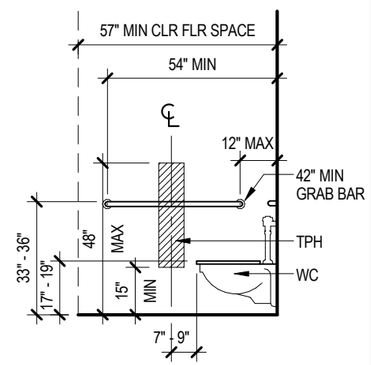

ACCESSIBLE WATER CLOSET

TOILET ROOM ACCESSORIES

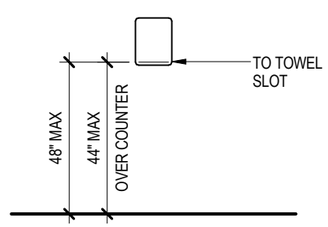

ACCESSIBLE PTD

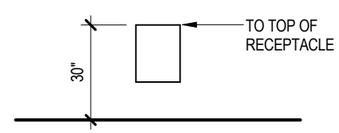

ACCESSIBLE WASTE RECEPTACLE

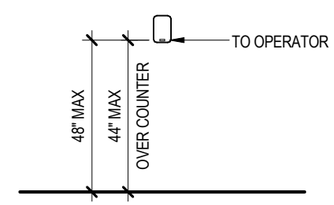

ACCESSIBLE SOAP AND HAND SANITIZER DISPENSER

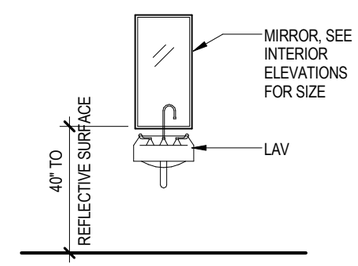

ACCESSIBLE MIRROR AT LAV

HUBER CENTER
VISITATION AREA REMODEL
St. Croix Country Jail
Hudson, Wisconsin

B|W|B|R
380 St. Peter Street, Suite 600
Saint Paul, MN 55102
651.222.3701 bwbr.com

Name Timothy J Sessions
Date 04/25/2016
Reg. No. 9193-5

I hereby certify that this plan, specification or report was prepared by me or under my direct supervision and that I am a duly Licensed Architect under the laws of the State of Wisconsin

Issued for	Date
CD ISSUE	04/25/2016

Comm. No. 3.2015141.01
Drawn BT

Sheet Title MOUNTING HEIGHTS

Sheet No. 600

Copyright BWBR

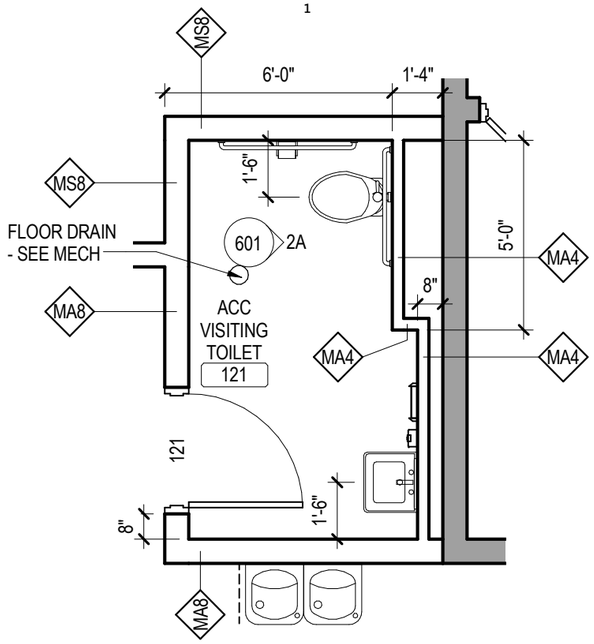

1B 601 ENLARGED PLAN - TOILET
1/4" = 1'-0"

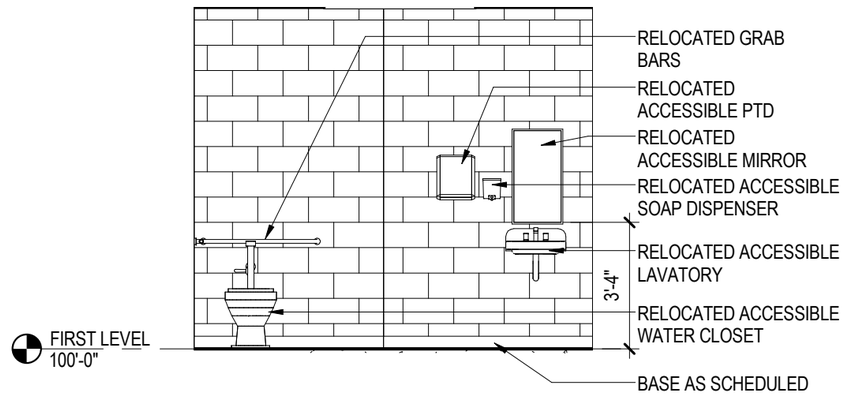

2A 601 ELEVATION - TOILET
1/4" = 1'-0"

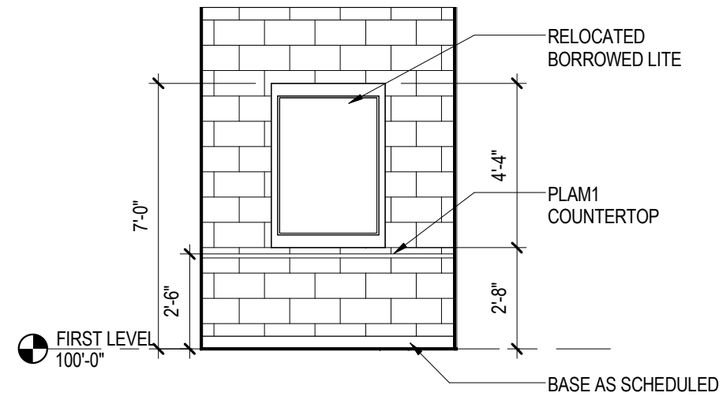

3A 601 ELEVATION - ACC INMATE VISIT
1/4" = 1'-0"

INTERIOR ELEVATION GENERAL NOTES:

1. SEE RCP FOR SOFFIT AND/OR BULKHEAD DETAIL REFERENCES.
2. COORDINATE ALL PLUMBING FIXTURES, CONTROLS AND VENTILATION REQUIREMENTS WITH MECHANICAL CONTRACTOR.
3. COORDINATE ALL ELECTRICAL OUTLETS, SWITCHES AND POWER REQUIREMENTS WITH ELECTRICAL CONTRACTOR.
4. VERIFY OPENING SIZES AND LOCATIONS OF OWNER FURNISHED, OWNER INSTALLED EQUIPMENT AND FURNISHINGS TO ASSURE NO INTERFERENCE WITH COUNTER SUPPORT BRACKETS, APRONS, ETC.

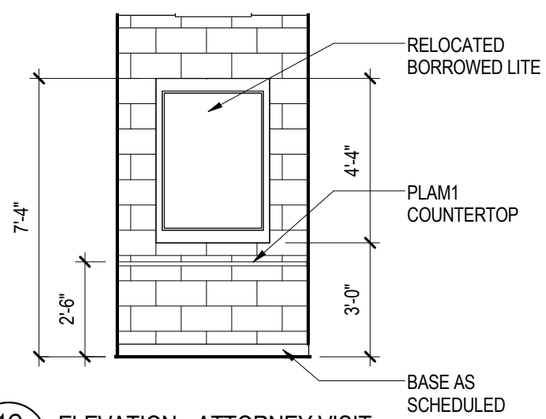

1C 601 ELEVATION - ATTORNEY VISIT
1/4" = 1'-0"

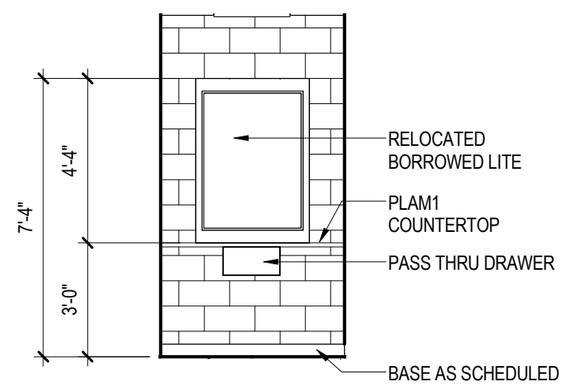

2C 601 ELEVATION - PAPER PASS
1/4" = 1'-0"

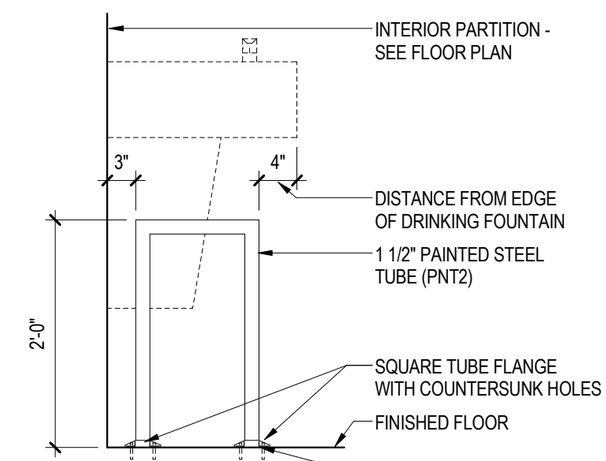

3C 601 CANE RAIL
3/4" = 1'-0"

HUBER CENTER
VISITATION AREA REMODEL
St. Croix Country Jail
Hudson, Wisconsin

BWBR
380 St. Peter Street, Suite 600
Saint Paul, MN 55102
651.222.3701 bwbr.com

Name Timothy J. Sessions
Date 04/25/2016
Reg. No. 9193-5

I hereby certify that this plan, specification or report was prepared by me or under my direct supervision and that I am a duly Licensed Architect under the laws of the State of Wisconsin

Issued for	Date
CD ISSUE	04/25/2016

Drawn BT
Comm. No. 3.2015141.01

Sheet Title
1/4" PLANS AND INTERIOR ELEVATIONS

Sheet No. 601

Copyright BWBR

4/25/2016 4:33:12 PM
This document may be an electronic file or may be printed from an electronic file provided to the user. It is the sole responsibility of the user to ensure that the content and quality is consistent with the content and quality of the paper document on file at BWBR.

This document may be an electronic file or may be printed from an electronic file provided to the user. It is the sole responsibility of the user to ensure that the content and quality is consistent with the content and quality of the paper documents on file at BWBR

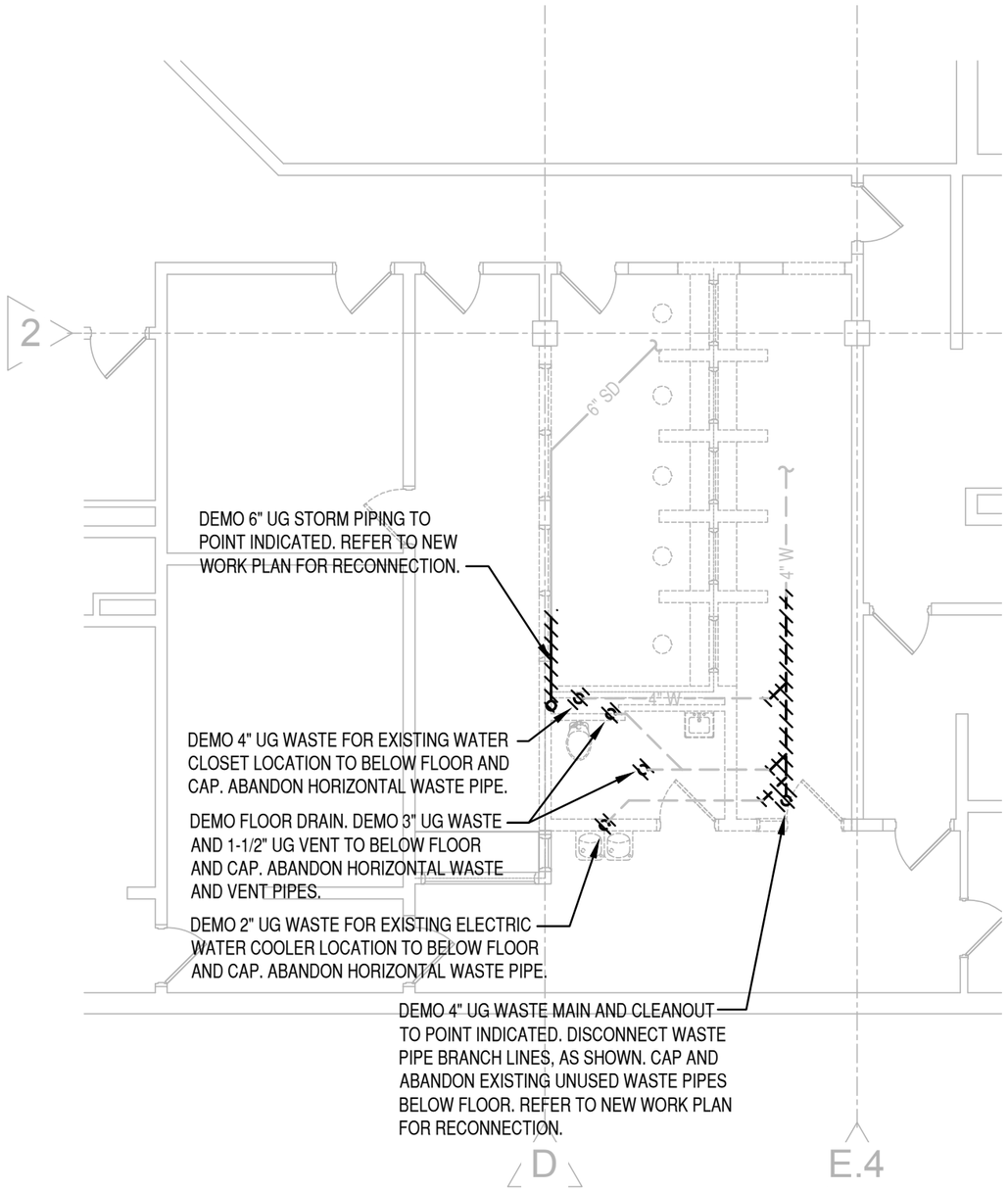

1 / 700.P PLUMBING DEMO PLAN - UNDERGROUND

1/8"=1'-0"

0 4' 8' 16' 32'

NORTH

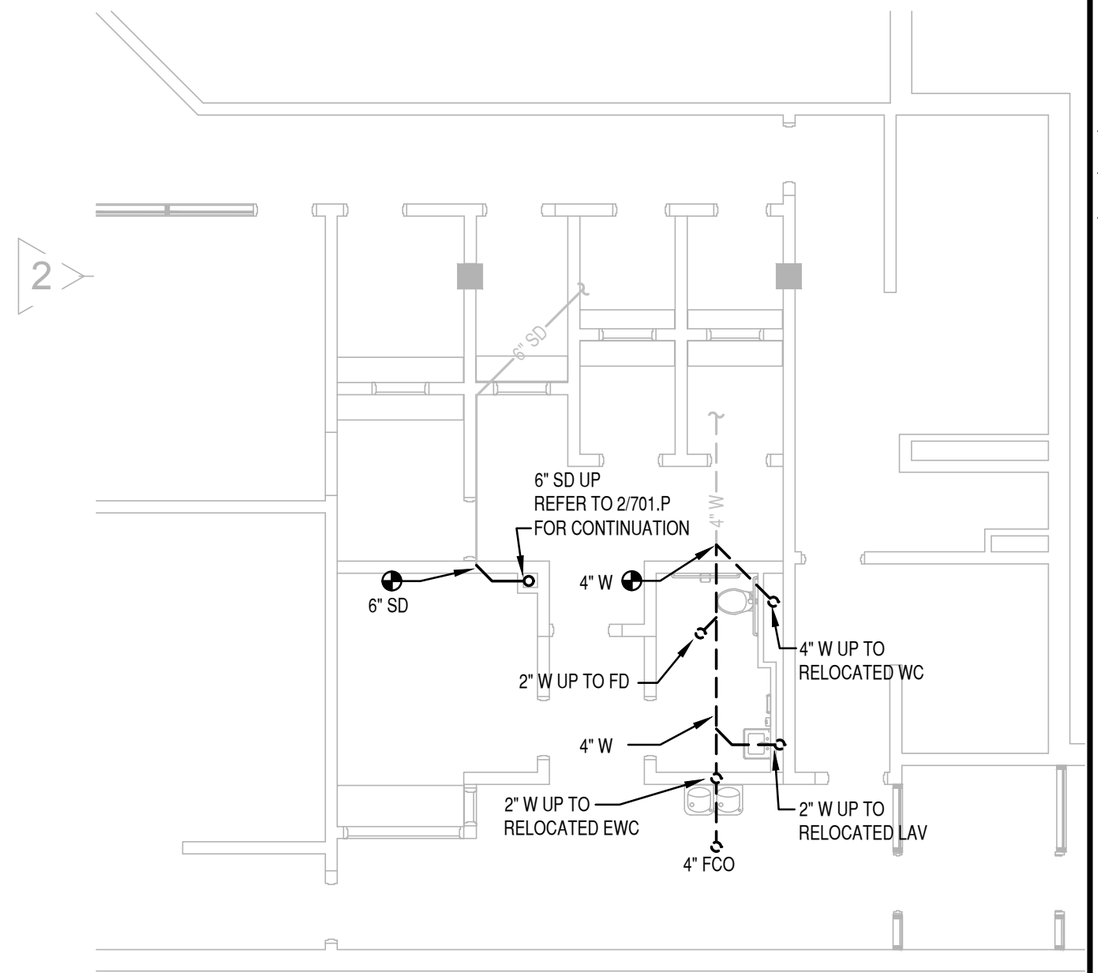

2 / 700.P PLUMBING PLAN - UNDERGROUND

1/8"=1'-0"

0 4' 8' 16' 32'

NORTH

4/25/2016

Copyright BWBR

Karger-Fadlovitch-Hagelin Inc. Engineers
670 CONCORDIA AVE WEST
ST. PAUL, MINNESOTA 55113
Ph. 651.771.0680
Fax 651.771.0678
E-mail: kfh@kfh-eng.com

B|W|B|R
380 St. Peter Street, Suite 600
Saint Paul, MN 55102
651.222.3701 bwbr.com

Name RANDY P. CHRISTENSON
Date APR 25, 2016
Reg. No. 38440

I hereby certify that this plan, specification or report was prepared by me or under my direct supervision and that I am a duly Licensed Engineer under the laws of the State of Wisconsin

Issued for	Date
95% CD	04/15/2016
CD ISSUE	04/25/2016

Drawn HTK
Checked RCP

Date APR 25, 2016
Comm. No. CD ISSUE

Sheet Title
PLUMBING PLANS UNDERGROUND

Sheet No.
700.P

This document may be an electronic file or may be printed from an electronic file provided to the user. It is the sole responsibility of the user to ensure that the content and quality is consistent with the content and quality of the paper documents on file at BWBR

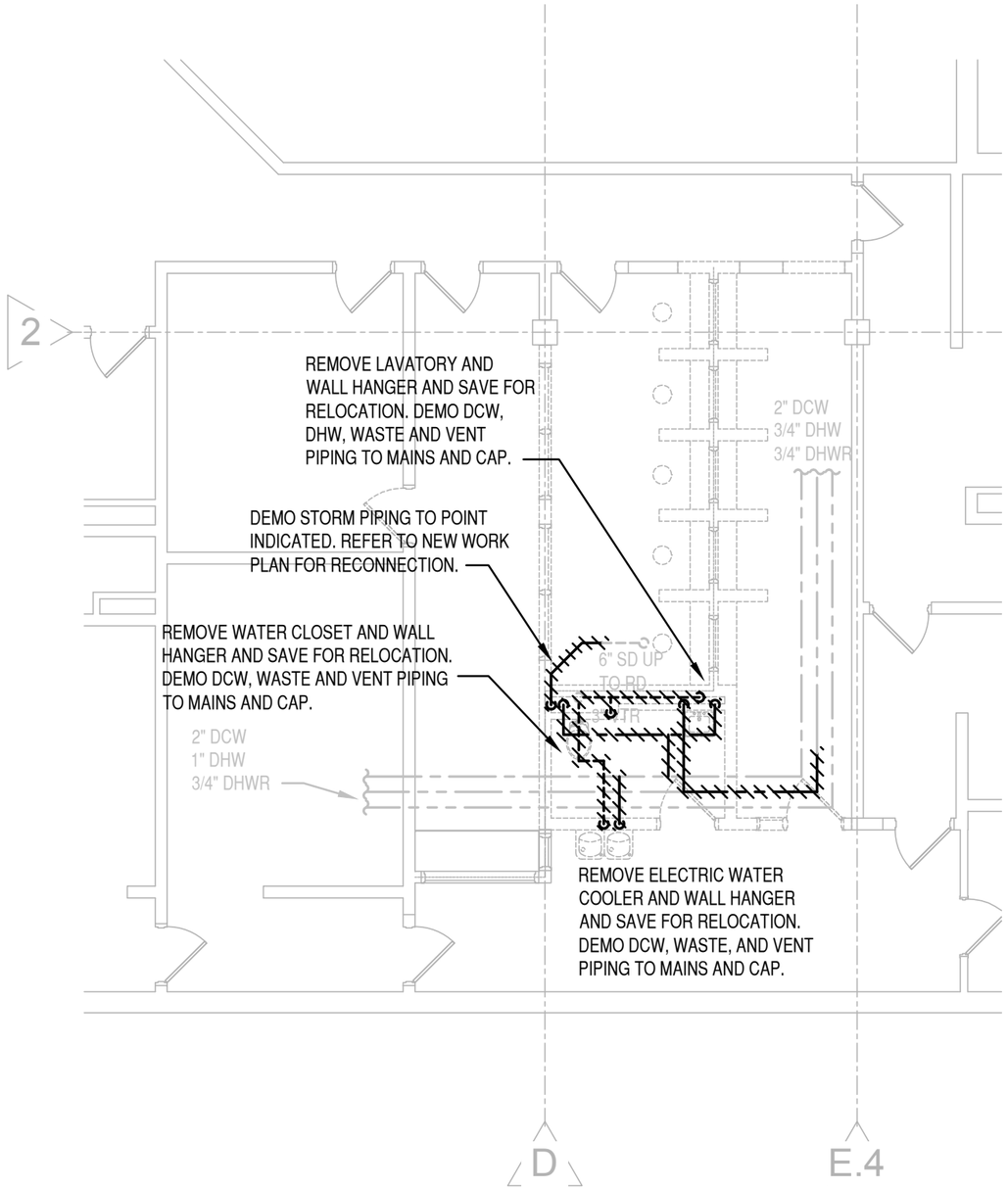

1 701.P PLUMBING DEMO PLAN - FIRST FLOOR

1/8"=1'-0"

NORTH

0 4' 8' 16' 32'

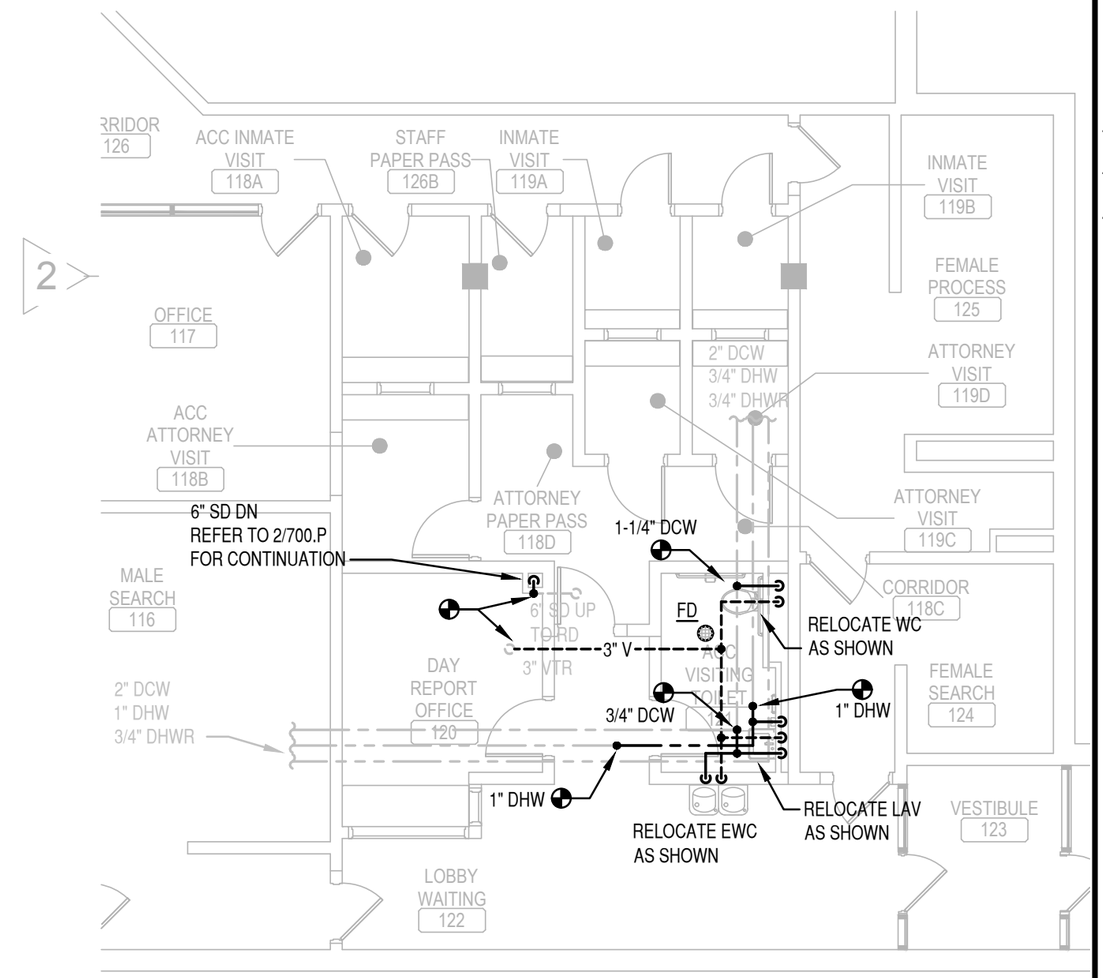

2 701.P PLUMBING PLAN - FIRST FLOOR

1/8"=1'-0"

NORTH

0 4' 8' 16' 32'

4/25/2016

Karger-Fulcomberidge Inc.
Mechanical
670 CONCORDIA AVE WEST
ST. PAUL, MINNESOTA 55113
Ph. 651.771.0875
Fax 651.771.0878
E-mail: kf@kf-eng.com

B|W|B|R
380 St. Peter Street, Suite 600
Saint Paul, MN 55102
651.222.3701 bwbr.com

Name RANDY P. CHRISTENSON
Date APR 25, 2016
Reg. No. 38440

I hereby certify that this plan, specification or report was prepared by me or under my direct supervision and that I am a duly Licensed Engineer under the laws of the State of Wisconsin

Issued for	Date
95% CD	04/15/2016
CD ISSUE	04/25/2016

Drawn HTK
Checked RCP

Date APR 25, 2016
Comm. No. CD ISSUE

Sheet Title
PLUMBING PLANS FIRST FLOOR

Sheet No. 701.P

Copyright BWBR

This document may be an electronic file or may be printed from an electronic file provided to the user. It is the sole responsibility of the user to ensure that the content and quality is consistent with the content and quality of the paper documents on file at BWBR

GENERAL PIPING PENETRATION NOTES:

1. INSULATION SHALL BE CARRIED THROUGH WALL OR FLOOR.
2. CONTRACTOR SHALL PROVIDE CHROME-PLATED WALL PLATE (ESCUTCHEON) IN ANY LOCATIONS WHERE THE PIPE PENETRATION IS EXPOSED TO VIEW, EXCEPTING ONLY MECHANICAL SPACES.
3. FOR PIPING THAT PENETRATES A FLOOR OR WALL, BUT DOES NOT REQUIRE INSULATION (E.G. VERTICAL RAINWATER LEADERS, SANITARY WASTE OR VENT), INSTALLATION SHALL INCLUDE ALL NOTED REQUIREMENTS, EXCEPTING ONLY THE PIPE INSULATION ITSELF.
4. ASSEMBLY MUST BE A U.L. LISTED ASSEMBLY AND MEET F.M. REQUIREMENTS FOR 1- OR 2-HOUR RATED SEPARATION, AS INDICATED ON ARCHITECTURAL PLANS.

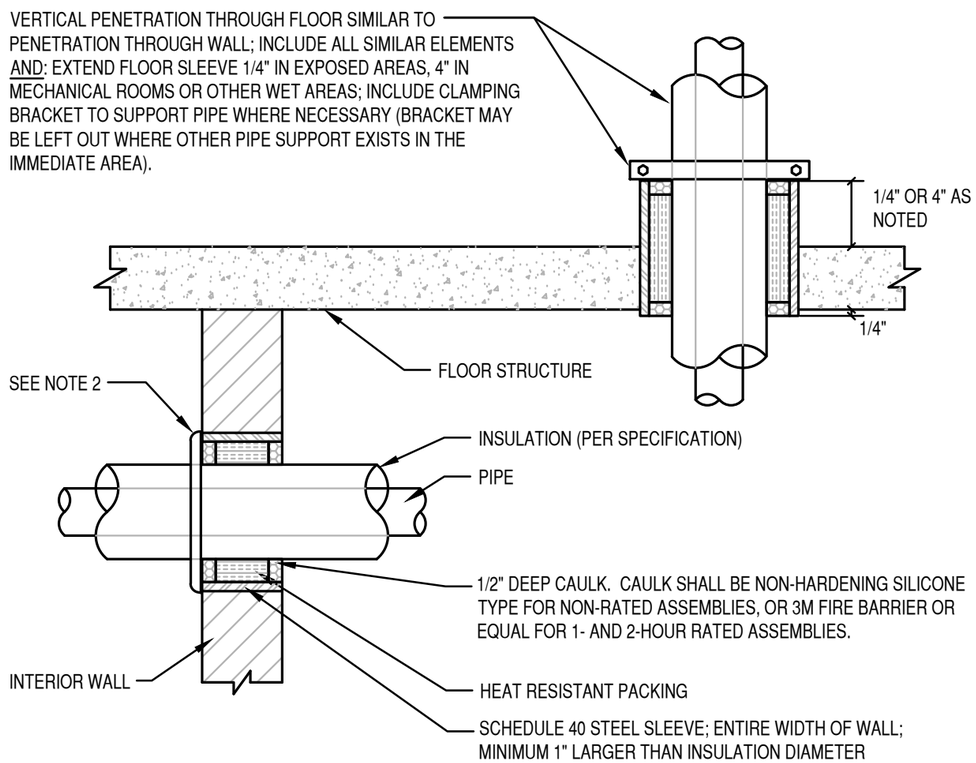

PIPING THROUGH WALL AND FLOOR: NON-RATED & 1 OR 2 HOUR RATED

2 / M760 — NOT TO SCALE — QMF NO. 07-7062 ISSUE NO. 01

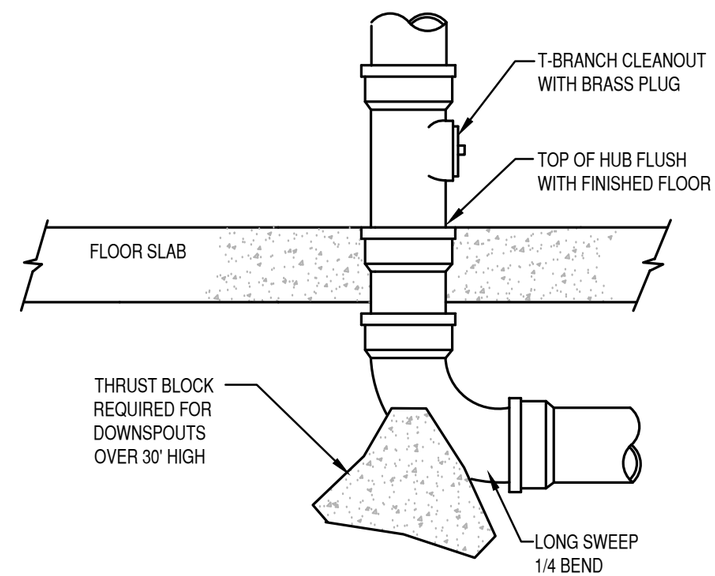

DOWNSPOUT CONN. TO UNDERGROUND

1 / M760 — NOT TO SCALE — QMF NO. 07-7010 ISSUE NO. 01

Karges-Faulconbridge, Inc. Engineers
670 COMMERCE BANK BLDG. WEST
ST. PAUL, MINNESOTA 55113
Tel. 651.771.0979
Fax 651.771.0978
E-mail: kfi@k-f-e-inc.com

BWBR
380 St. Peter Street, Suite 600
Saint Paul, MN 55102
651.222.3701 bwbr.com

Name RANDY P. CHRISTENSON
Date APR 25, 2016
Reg. No. 38440

I hereby certify that this plan, specification or report was prepared by me or under my direct supervision and that I am a duly Licensed Engineer under the laws of the State of Wisconsin

Date	Drawn	Issued for	Date
APR 25, 2016	HTK	95% CD	04/15/2016
Comm. No.	Checked	CD ISSUE	04/25/2016
CD ISSUE	RCP		

Sheet Title: PLUMBING DETAILS

Sheet No. 760

Copyright BWBR

4/25/2016

PLUMBING FIXTURE AND TRIM SCHEDULES SD QMF 08-2029: 2

PLUMBING FIXTURE SCHEDULE

FIXTURE TAG	FIXTURE DESCRIPTION	FAUCET/TRIM DESCRIPTION	WASTE	VENT	DCW	DHW	NUMBERED NOTES	REMARKS
	WATER CLOSETS							
WC	WALL MOUNT (RELOCATED)	REUSE EXISTING	4"	2"	1-1/4"	-	2	CONNECT PIPING TO EXISTING FIXTURE. VERIFY PIPE SIZE
	LAVATORIES							
LAV	WALL HUNG, VITREOUS CHINA (RELOCATED)	REUSE EXISTING	2"	1-1/2"	1/2"	1/2"	1	CONNECT PIPING TO EXISTING FIXTURE. VERIFY PIPE SIZE
	ELECTRIC WATER COOLERS							
EWC	BI-LEVEL - ADA (RELOCATED)	REUSE EXISTING	2"	1-1/2"	1/2"	-	1	CONNECT PIPING TO EXISTING FIXTURE. VERIFY PIPE SIZE

NOTES:

1. REUSE WALL MOUNTED FIXTURE CARRIER. REPLACE STOPS, SUPPLY WATER PIPING, CHROME P-TRAP.
2. REUSE WALL MOUNTED FIXTURE CARRIER. REPLACE WASTE CONNECTION, SUPPLY WATER PIPING, AND STOP

PLUMBING SPECIALTIES SCHEDULE

TAG	DESCRIPTION	REMARKS
	FLOOR DRAINS	
FD	ROUND, 6" NICKEL-BRONZE STRAINER	2" FLOOR DRAIN-JOSAM 30000A
	CLEANOUTS	
FCO	INTERIOR FLOOR	4" CLEANOUT COVER SHALL MATCH FLOOR TYPE -JOSAM 55000

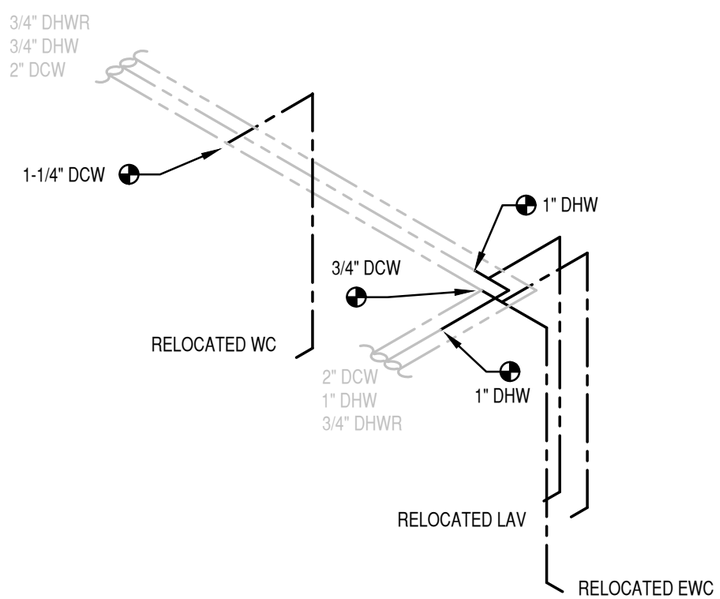

1 761 DOMESTIC WATER PIPING ISOMETRIC

NO SCALE

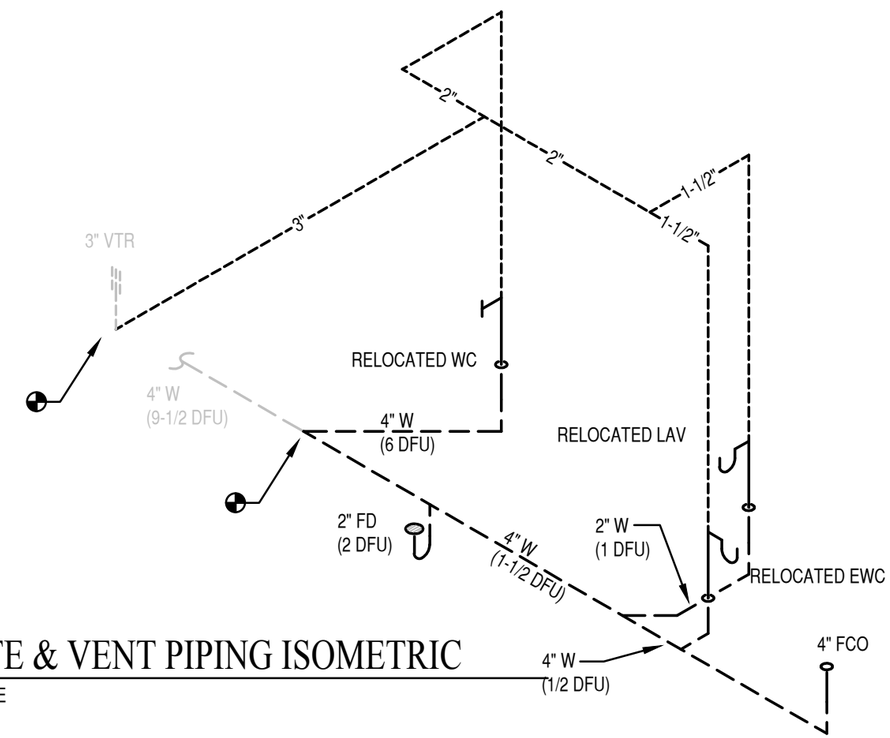

2 761 WASTE & VENT PIPING ISOMETRIC

NO SCALE

4/25/2016

This document may be an electronic file or may be printed from an electronic file provided to the user. It is the sole responsibility of the user to ensure that the content and quality is consistent with the content and quality of the paper documents on file at BWBR

Karger-Faulconbridge, Inc.
Engineers
670 CONCORD AVENUE WEST
ST. PAUL, MINNESOTA 55113
Ph: 651.771.0878
Fax: 651.771.0879
E-mail: kf@k-f-inc.com

BWBR
380 St. Peter Street, Suite 600
Saint Paul, MN 55102
651.222.3701 bwbr.com

Name RANDY P. CHRISTENSON
Date APR 25, 2016
Reg. No. 38440

I hereby certify that this plan, specification or report was prepared by me or under my direct supervision and that I am a duly Licensed Engineer under the laws of the State of Wisconsin

	Date	Issued for
	04/15/2016	95% CD
	04/25/2016	CD ISSUE

Drawn HTK
Checked RCP

Date APR 25, 2016
Comm. No.
CD ISSUE

Sheet Title
PLUMBING SCHEDULE & ISOMETRICS

Sheet No.
761

Copyright BWBR

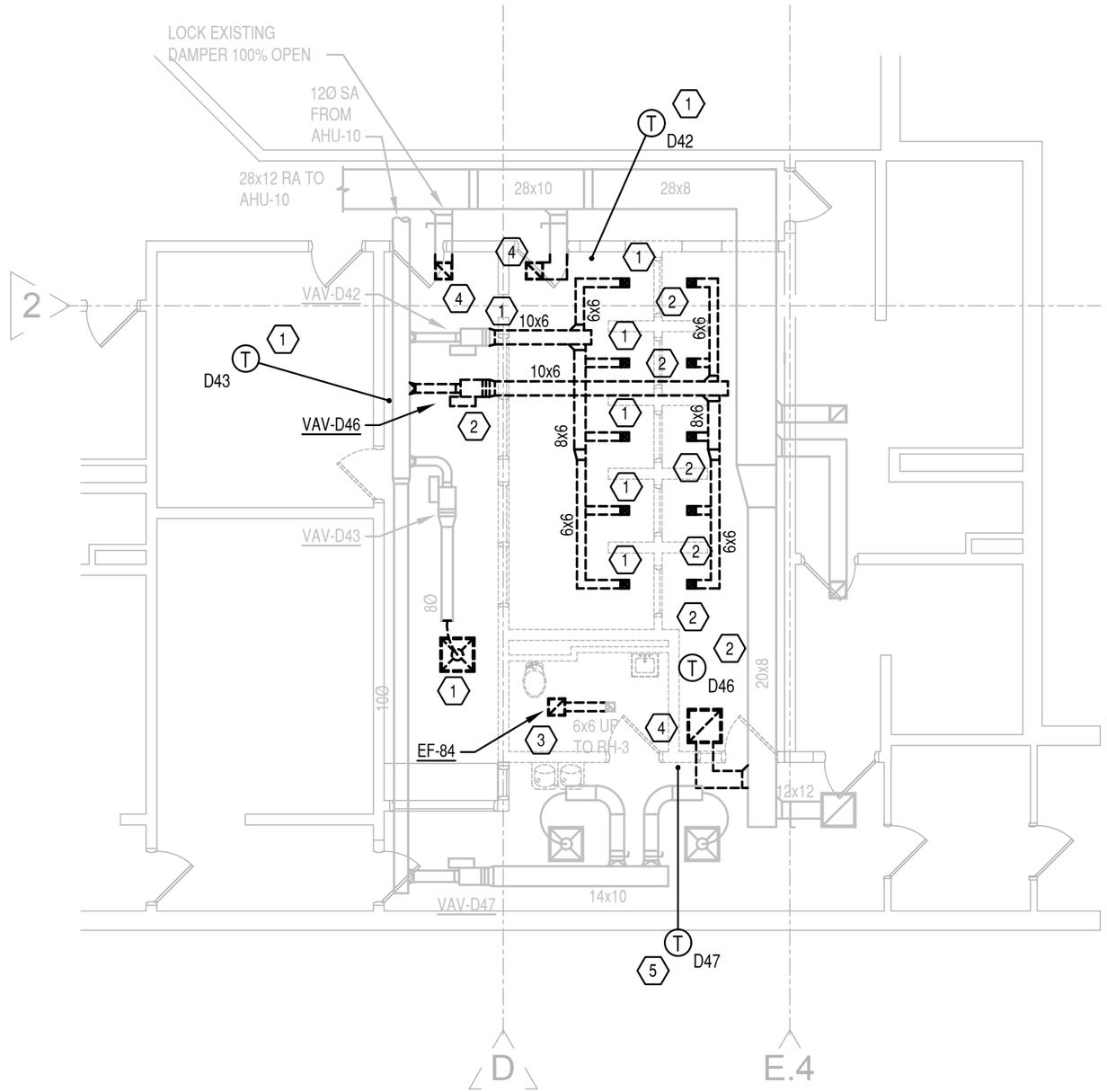

HVAC DEMOLITION NOTES

1. DEMO SUPPLY AIR DUCTWORK, DIFFUSERS, AND HANGERS TO POINT INDICATED. REMOVE THERMOSTAT AND SAVE FOR RELOCATION. VAV BOX TO REMAIN FOR RECONNECTION TO NEW DUCTWORK.
2. DEMO SUPPLY AIR DUCTWORK, DIFFUSERS, AND HANGERS TO POINT INDICATED AND CAP MAIN. REMOVE VAV BOX AND THERMOSTAT AND SAVE FOR RELOCATION. VAV BOX TO BE RECONNECTED TO EXISTING DUCT MAIN, BRANCH PIPING, AND NEW DUCTWORK.
3. DEMO EXHAUST AIR DUCTWORK TO POINT INDICATED AND CAP MAIN. REMOVE EXHAUST FAN AND SAVE FOR RELOCATION. EXHAUST FAN TO BE RECONNECTED TO NEW DUCTWORK AND EXISTING RELIEF HOOD.
4. DEMO RETURN AIR DUCTWORK TO POINT INDICATED. REFER TO NEW WORK PLAN FOR RECONNECTION. CAP IF NOT REUSED.
5. REMOVE THERMOSTAT AND SAVE FOR RECONNECTION.

1 / 801.DH

HVAC DEMOLITION PLAN

1/8"=1'-0"

0 4' 8' 16' 32'

NORTH

This document may be an electronic file or may be printed from an electronic file provided to the user. It is the sole responsibility of the user to ensure that the content and quality is consistent with the content and quality of the paper documents on file at BWBR

Karger-Fadlovitch&Associates, Inc.
Mechanical
670 CONCORDIA AVE WEST
ST. PAUL, MINNESOTA 55113
Ph. 651.771.0555
Fax 651.771.0678
E-mail: kf@k-f-a.com

B|W|B|R
380 St. Peter Street, Suite 600
Saint Paul, MN 55102
651.222.3701 bwbr.com

Name RANDY P. CHRISTENSON
Date APR 25, 2016
Reg. No. 38440

I hereby certify that this plan, specification or report was prepared by me or under my direct supervision and that I am a duly Licensed Engineer under the laws of the State of Wisconsin

Date	Issued for
04/15/2016	95% CD
04/25/2016	CD ISSUE

Drawn HTK
Checked RCP

Date APR 25, 2016
Comm. No.
CD ISSUE

Sheet Title
HVAC DEMOLITION PLAN

Sheet No.
801.DH

Copyright BWBR

4/25/2016

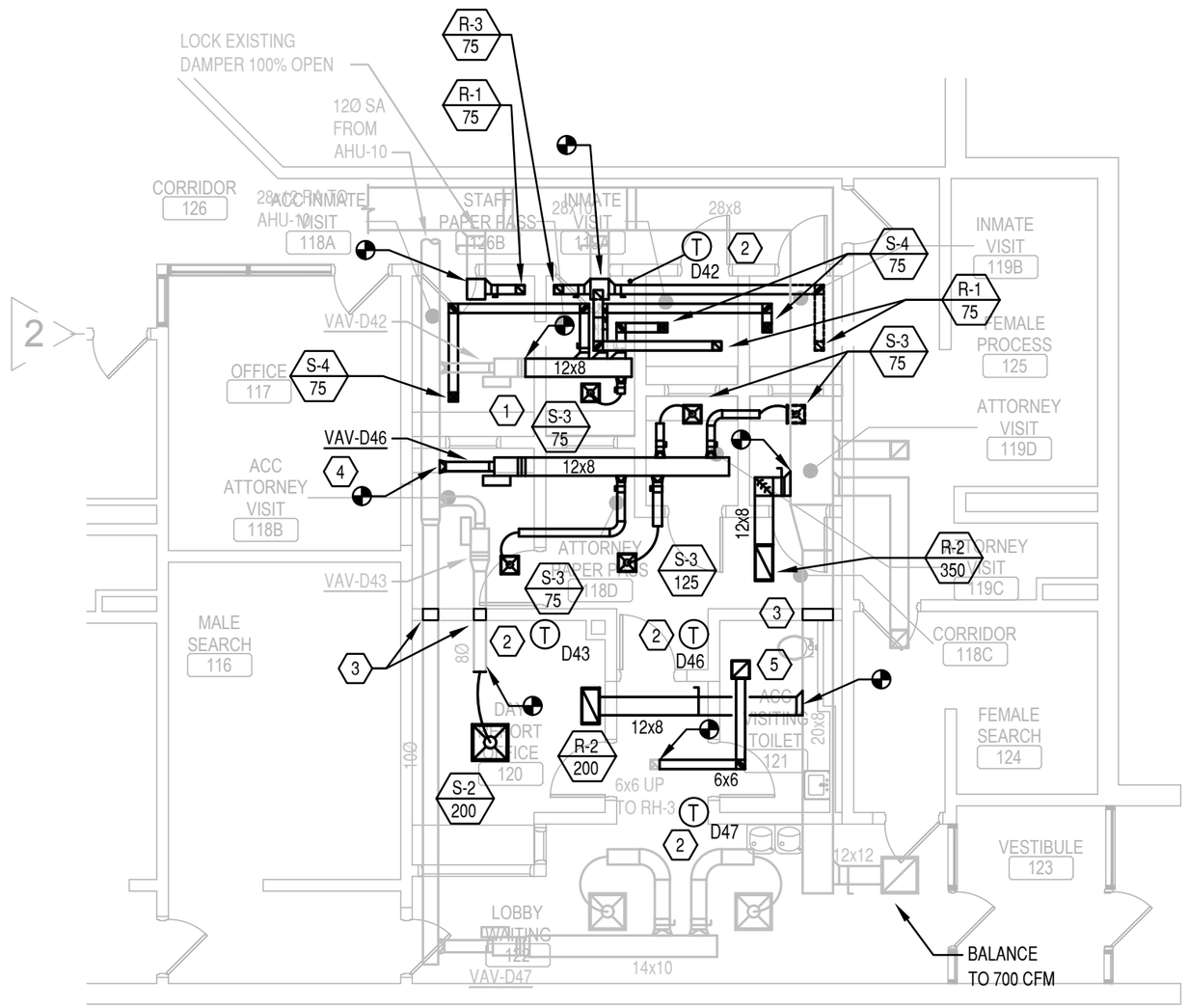

KEYED NOTES

1. REBALANCE EXISTING VAV BOX FOR AIR FLOW OF NEW SUPPLY AIR OUTLETS.
2. REMOUNT SALVAGED THERMOSTAT AND RECONNECT WIRING TO INDICATED VAV BOX.
3. PROVIDE SECURITY BARS IN EXISTING AND NEW DUCTWORK THRU SECURITY BOUNDARY IN REMODELED AREA.
4. RELOCATE EXISTING VAV BOX AND THERMOSTAT. RECONNECT PIPING, CONTROL WIRING, AND INLET DUCTWORK TO EXISTING. REBALANCE EXISTING VAV BOX FOR AIR FLOW OF NEW SUPPLY AIR OUTLETS.
5. RELOCATE EXISTING EXHAUST FAN. RECONNECT DUCTWORK TO EXISTING RELIEF HOOD.

1 / 801.H HVAC PLAN

1/8"=1'-0"

0 4' 8' 16' 32'

4/25/2016

Karger-Fadoorbridge Inc. Engineers
670 CONCORDIA AVENUE WEST
ST. PAUL, MINNESOTA 55113
Tel. 651.771.0555
Fax 651.771.0678
E-mail: kf@kf-eng.com

B|W|B|R
380 St. Peter Street, Suite 600
Saint Paul, MN 55102
651.222.3701 bwbr.com

Name RANDY P. CHRISTENSON
Date APR 25, 2016
Reg. No. 38440

I hereby certify that this plan, specification or report was prepared by me or under my direct supervision and that I am a duly Licensed Engineer under the laws of the State of Wisconsin

Date	Drawn	Issued for	Date
APR 25, 2016	HTK	95% CD	04/15/2016
Comm. No.	Checked	CD ISSUE	04/25/2016
CD ISSUE	RCP		

Sheet Title: HVAC PLAN

Sheet No. 801.H

Copyright BWBR

This document may be an electronic file or may be printed from an electronic file provided to the user. It is the sole responsibility of the user to ensure that the content and quality is consistent with the content and quality of the paper documents on file at BWBR

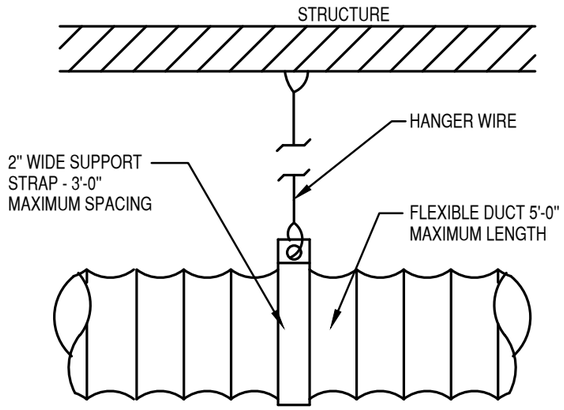

1 / 860 FLEX-DUCT SUPPORT

NOT TO SCALE QMF NO. 07-5043 ISSUE NO. 01

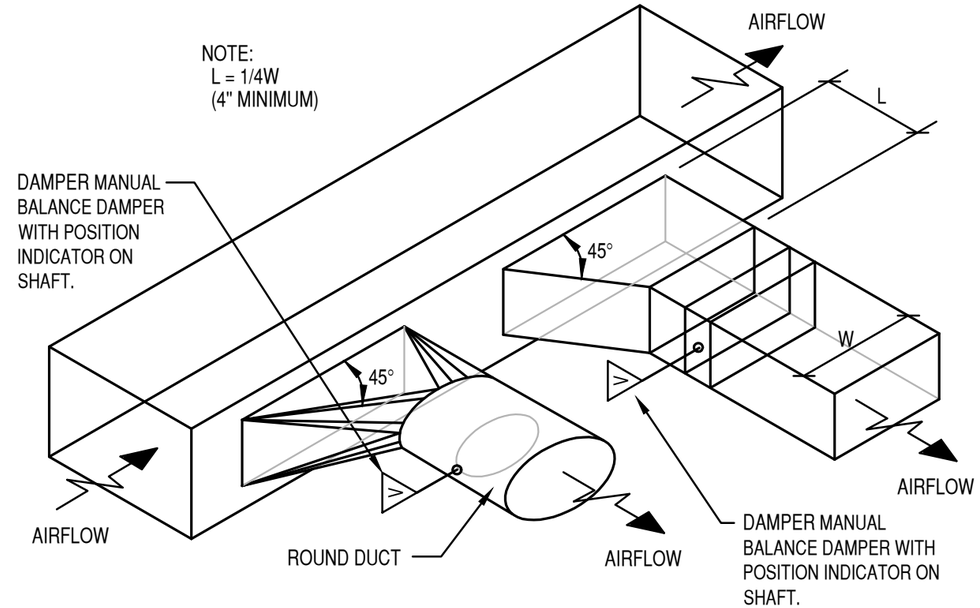

2 / 860 RIGID DUCT TAKE-OFF DETAIL

NOT TO SCALE QMF NO. 07-5085 ISSUE NO. 01

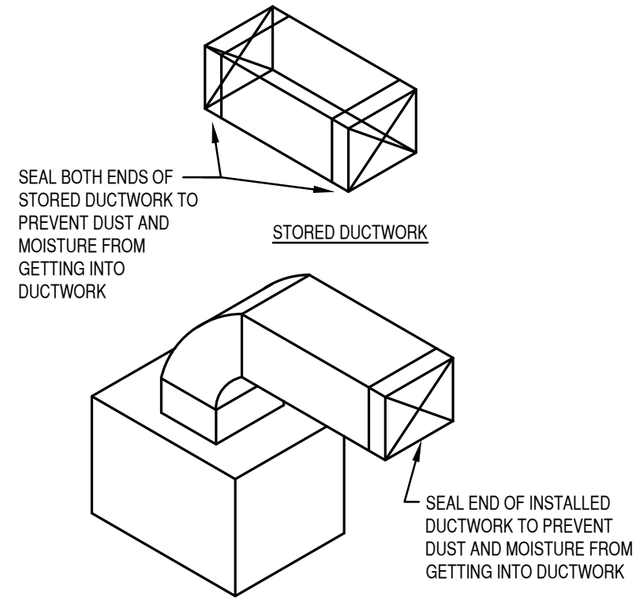

3 / 860 DUCTWORK PROTECTION DURING CONSTRUCTION DETAIL

NOT TO SCALE QMF NO. 07-5027 ISSUE NO. 01

4/25/2016

This document may be an electronic file or may be printed from an electronic file provided to the user. It is the sole responsibility of the user to ensure that the content and quality is consistent with the content and quality of the paper documents on file at BWBR

Karger-Fultcontrbigelow Engineers
670 CONCORD WEST
ST. PAUL, MINNESOTA 55113
Ph: 651-771-0900
Fax: 651-771-0978
E-mail: kf@k-f-e-inc.com

BWBR
380 St. Peter Street, Suite 600
Saint Paul, MN 55102
651.222.3701 bwbr.com

Name RANDY P. CHRISTENSON
Date APR 25, 2016
Reg. No. 38440

I hereby certify that this plan, specification or report was prepared by me or under my direct supervision and that I am a duly Licensed Engineer under the laws of the State of Wisconsin

Date	Issued for	Date
	95% CD	04/15/2016
	CD ISSUE	04/25/2016

Drawn HTK
Checked RCP

Date APR 25, 2016
Comm. No.
CD ISSUE

Sheet Title HVAC DETAILS

Sheet No. 860

Copyright BWBR

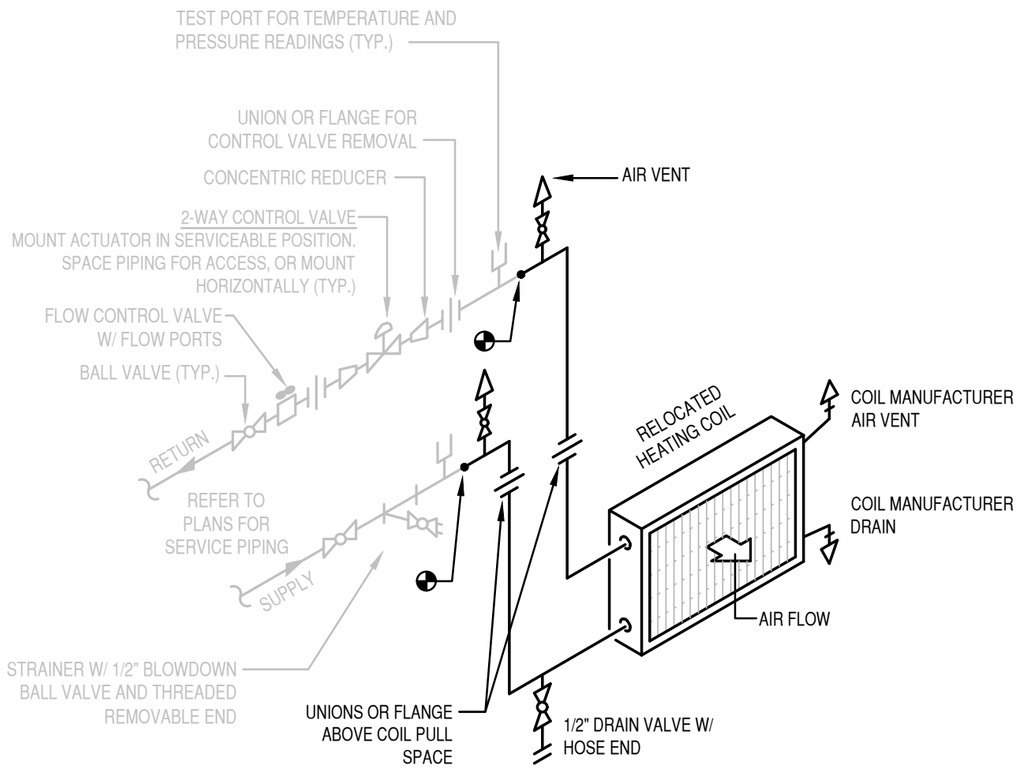

NOTES:

1. INSTALL PIPING AND LOCATE UNIONS OR FLANGES SO COIL CAN BE PULLED WITHOUT DISMANTLING PIPING.
2. REUSE EXISTING PIPING COMPONENTS. EXTEND PIPING AS NEEDED FOR NEW COIL LOCATION. RELOCATE PIPING COMPONENTS AS NEEDED.
3. THIS DETAIL APPLIES TO RELOCATED REHEAT COIL

1 / 861 VAV COIL PIPING

NOT TO SCALE QMF NO. 07-6076 ISSUE NO. 02

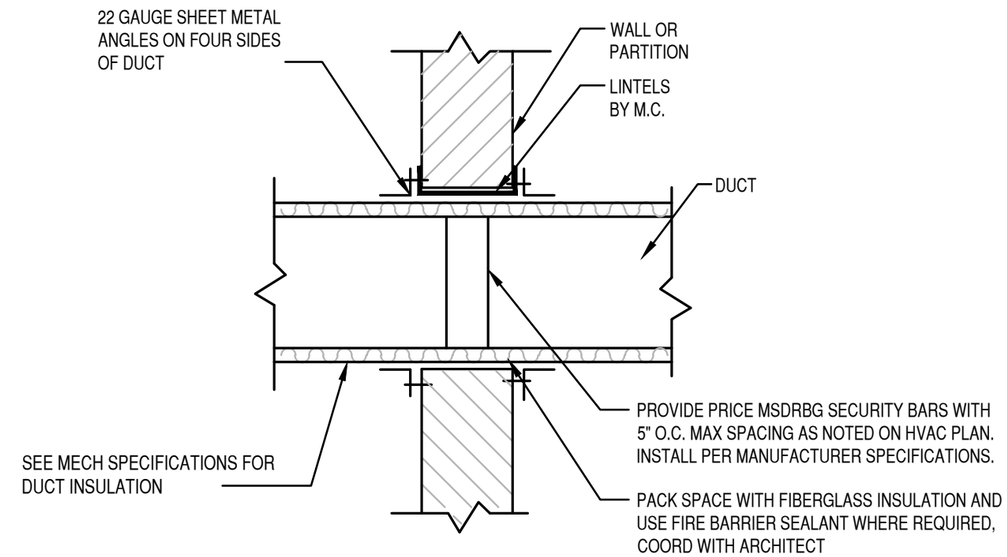

NOTES:

A. INSULATION SHALL CARRY THROUGH PENETRATION.

B. CONTRACTOR IS RESPONSIBLE FOR REVIEWING MECHANICAL AND ARCHITECTURAL PLANS TO VERIFY ALL WALL PENETRATIONS.

C. LINTELS ARE REQUIRED ONLY IN MASONRY WALLS WHERE THE WIDTH OF THE DUCT IS GREATER THAN 12". REFER TO SEPARATE DETAIL. REFER ALSO TO STRUCTURAL PLANS.

D. REFER TO ARCHITECTURAL AND MECHANICAL PLANS FOR LOCATIONS OF FIRE-RATED WALLS. WHERE DUCT PENETRATES FIRE-RATED WALLS, THE CAULK NOTED IN DETAIL SHALL BE FIRE-RATED CAULK, INSTALLED PER MANUFACTURER'S REQUIREMENTS.

2 / 861 DUCT PENETRATION THROUGH INTERIOR WALL

NOT TO SCALE QMF NO. 07-5024 ISSUE NO. 02

This document may be an electronic file or may be printed from an electronic file provided to the user. It is the sole responsibility of the user to ensure that the content and quality is consistent with the content and quality of the paper documents on file at BWBR

Karger-Fultcontrktgs.inc. Engineers
670 CONCORD AVENUE WEST
ST. PAUL, MINNESOTA 55113
Ph: 651.771.0878
Fax: 651.771.0879
E-mail: kf@k-f-eng.com

BWBR
380 St. Peter Street, Suite 600
Saint Paul, MN 55102
651.222.3701 bwbr.com

Name RANDY P. CHRISTENSON
Date APR 25, 2016
Reg. No. 38440

I hereby certify that this plan, specification or report was prepared by me or under my direct supervision and that I am a duly Licensed Engineer under the laws of the State of Wisconsin

Issued for	Date
95% CD	04/15/2016
CD ISSUE	04/25/2016

Drawn HTK
Checked RCP

Date APR 25, 2016
Comm. No.
CD ISSUE

Sheet Title HVAC DETAILS

Sheet No. 861

Copyright BWBR

4/25/2016

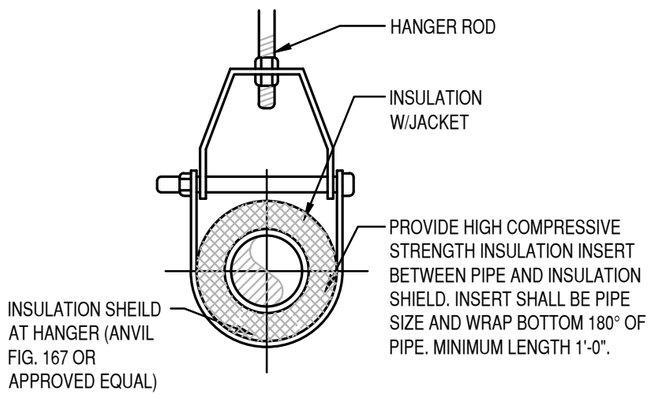

ADJUSTABLE CLEVIS HANGER
(ANVIL FIG. 260 OR APPROVED EQUAL)

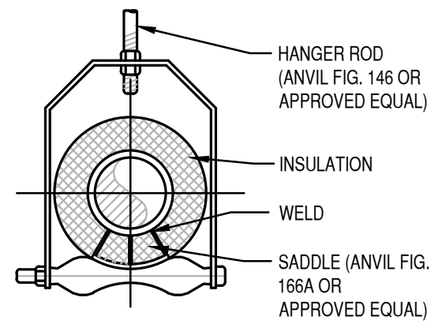

ADJUSTABLE ROLLER HANGER
(ANVIL FIG. 181 OR APPROVED EQUAL)

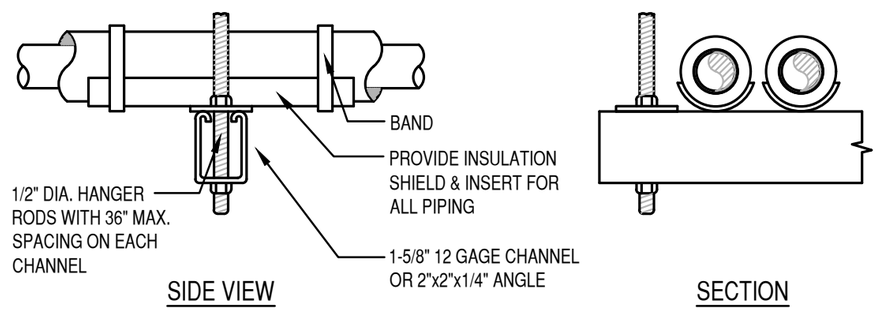

TRAPEZE HANGER FOR UP TO 800 LB. UNIFORM LOAD
(FOR LOADS >800lbs. ANVIL FIG. 45/46/50 OR APPROVED EQUAL)

NOTE: SEE MFR'S THREADED ROD DATA FOR LOAD CARRYING CAPACITIES.
ROD: ASTM.A36

3
862

PIPE SUPPORT DETAIL

NOT TO SCALE QMF NO. 07-6055 ISSUE NO. 01

This document may be an electronic file or may be printed from an electronic file provided to the user. It is the sole responsibility of the user to ensure that the content and quality is consistent with the content and quality of the paper documents on file at BWBR

Karger-Fultcontridge Inc.
Engineers
670 CONCORD AVENUE WEST
ST. PAUL, MINNESOTA 55113
Ph: 651.771.0979
Fax: 651.771.0978
E-mail: kf@kf-eng.com

B|W|B|R
380 St. Peter Street, Suite 600
Saint Paul, MN 55102
651.222.3701 bwbr.com

Name RANDY P. CHRISTENSON
Date APR 25, 2016
Reg. No. 38440

I hereby certify that this plan, specification or report was prepared by me or under my direct supervision and that I am a duly Licensed Engineer under the laws of the State of Wisconsin

Drawn	HTK	Issued for	95% CD
Checked	RCP		CD ISSUE

Date	04/15/2016	Date	APR 25, 2016
	04/25/2016	Comm. No.	CD ISSUE

Sheet Title
HVAC DETAILS

Sheet No.
862

Copyright BWBR

4/25/2016

GRILLES, REGISTERS, AND DIFFUSERS SCHEDULE (MASTER SCHEDULE NOT ALL ARE USED IN THIS PROJECT) SD QMF 08-2021: 1

TAG	MANUF.	SERVES	MODEL	TYPE	MAX CFM	MAX CORE VEL. FPM	MAX NC	FACE SIZE	NECK SIZE	ADJUSTABLE DEFLECTION	MATERIAL	NOTES
S-1	TITUS	VARIES	TMS	1	425	800	20	24x24	10" ROUND	4-WAY	STEEL	1,2,5,8
S-2	TITUS	VARIES	TMS	1	275	800	20	24x24	8" ROUND	4-WAY	STEEL	1,2,5,8
S-3	TITUS	VARIES	TMS	1	150	800	16	24x24	6" ROUND	4-WAY	STEEL	1,2,5,8
S-4	TITUS	VARIES	300 RS	2	150	500	12	6x6	6x6	3-WAY	STEEL	1,2,3,4,5,6,7
R-1	TITUS	VARIES	50F	3	75	400	20	6x6	6x6	0	ALUM	1,2,3,6,7
R-2	TITUS	VARIES	50F-NT	3	700	400	17	24x12	12x8	0	ALUM	1,2,6,7,8
R-3	TITUS	VARIES	50F	3	75	400	20	6x6	6x6	0	ALUM	1,2,6,7,8

TYPE:

1. SQUARE VERTICAL AND HORIZONTAL ADJUSTABLE THROW
2. DOUBLE DEFLECTION W/ PLENUM BOX
3. EGG CRATE W/ PLENUM BOX

GENERAL NOTES FOR ALL GRILLS, REGISTERS, AND DIFFUSER:

1. THIS CONTRACTOR IS RESPONSIBLE FOR VERIFICATION OF SUBMITTALS PROVIDING ALL QUANTITIES, REQUIRED FRAME TYPES AND FINISHES.
2. SUBMIT COLOR CHARTS TO ARCHITECT PRIOR TO SUBMITTAL PROCESS.
3. PROVIDE BALANCING DAMPER IN ACCESSIBLE LOCATION FOR ALL DIFFUSERS, GRILLES, AND REGISTERS.

NOTES:

1. VERIFY ALL BORDER TYPES WITH ARCH. PLANS
2. ELECTRO COAT ENAMEL, COLOR BY ARCHITECT
3. HARDLID CEILING MOUNTED
4. DOUBLE DEFLECTION
5. OPPOSED BLADE VOLUME DAMPERS
6. WITH PLENUM BOX
7. CORE WITH FRAME, BORDER, MITERED CORNERS
8. LAY-IN CEILING MOUNTED

This document may be an electronic file or may be printed from an electronic file provided to the user. It is the sole responsibility of the user to ensure that the content and quality is consistent with the content and quality of the paper documents on file at BWBR

Karger-Fultcontrktgs.Inc. Engineers
670 CONCORD AVENUE WEST
ST. PAUL, MINNESOTA 55113
Ph: 651-771-0979
Fax: 651-771-0978
E-mail: kf@kf-eng.com

BWBR
380 St. Peter Street, Suite 600
Saint Paul, MN 55102
651.222.3701 bwbr.com

Name RANDY P. CHRISTENSON
Date APR 25, 2016
Reg. No. 38440

I hereby certify that this plan, specification or report was prepared by me or under my direct supervision and that I am a duly Licensed Engineer under the laws of the State of Wisconsin

Date	Issued for
04/15/2016	95% CD
04/25/2016	CD ISSUE

Drawn HTK
Checked RCP

Date APR 25, 2016
Comm. No. CD ISSUE

Sheet Title MECHANICAL SCHEDULES

Sheet No. 870

Copyright BWBR

4/25/2016

ST. CROIX COUNTY JAIL
HUBER VISITING REMODEL

GENERAL ELECTRICAL POWER AND LIGHTING NOTES

A. INSTALL ELECTRICAL WORK IN ACCORDANCE WITH THE REQUIREMENTS OF THE LATEST EDITION OF THE NATIONAL ELECTRICAL CODE, STATE, COUNTY, MUNICIPAL AND FEDERAL LAWS OR ORDINANCES GOVERNING THE PROJECT. IF THE PLANS AND SPECIFICATIONS ARE IN DIRECT CONFLICT WITH SUCH CODES, LAWS OR ORDINANCES NOTIFY THE ENGINEER OF CONFLICTS IN WRITING PRIOR TO MAKING CHANGES FROM PLANS AND/OR SPECIFICATIONS. WORK SHALL BE PERFORMED UNDER THE SUPERVISION OF A LICENSED MASTER ELECTRICIAN.

B. BRANCH CIRCUIT CONDUITS, JUNCTION BOXES AND CONNECTIONS ARE NOT SHOWN. PROVIDE COMPLETE RACEWAY SYSTEM AND CONDUCTORS AS REQUIRED FOR THE INDICATED CIRCUITRY.

C. HOMERUN CIRCUITS TO BE 2#12, 1#12G, 3/4" C TO 20A/1P CIRCUIT BREAKER IN DESIGNATED PANEL, UNLESS NOTED OTHERWISE. THE NUMBERS SHOWN AT EACH DEVICE/HOMERUN REPRESENT BRANCH CIRCUIT NUMBER IN PANELBOARD. ELECTRICAL CONTRACTOR TO VERIFY ACTUAL PANELBOARDS / CIRCUITS UTILIZED.

D. A MAXIMUM OF THREE CIRCUITS SHALL BE INSTALLED IN A CONDUIT.

E. PROVIDE DEDICATED NEUTRAL FOR EACH CIRCUIT. MULTI-WIRE BRANCH CIRCUITS ARE NOT PERMITTED. EACH CIRCUIT SHALL HAVE A SEPARATE NEUTRAL CONDUCTOR. NEUTRAL CONDUCTORS SHALL NOT BE SHARED.

F. INSTALL WIRING (CONDUITS, ETC) CONCEALED. NO SURFACE WIRING SHALL BE INSTALLED IN FINISHED AREAS, UNLESS NOTED OTHERWISE.

G. WIRING ABOVE CEILING THAT IS NOT IN CONDUIT AND LOCATED IN AN AIR HANDLING PLENUM SHALL BE PLENUM RATED. REFER TO MECHANICAL PLANS FOR PLENUM AREAS.

H. PROVIDE UNIVERSAL BLANK PLUGS ON SPARE CONDUITS EQUAL TO CARLON 'MAEPG' SERIES OR EQUAL.

I. ALTHOUGH FEEDER AND BRANCH CIRCUIT WIRE AND CONDUITS ARE NOT SPECIFICALLY SHOWN, IT IS THE INTENT OF THESE DOCUMENTS THAT A COMPLETE FEEDER AND BRANCH CIRCUIT WIRING SYSTEM IS INSTALLED.

J. INDIVIDUAL OR GENERAL PURPOSE BRANCH CIRCUIT 120 VOLT; CIRCUITS OVER 100'-0 IN CONDUCTOR LENGTH SHALL BE INCREASED ONE WIRE SIZE AND CIRCUITS OVER 170'-0 IN CONDUCTOR LENGTH SHALL BE INCREASED TWO WIRE SIZES UNLESS NOTED OTHERWISE.

K. DO NOT INSTALL OUTLETS BACK TO BACK. PROVIDE MINIMUM 24 INCH HORIZONTAL SPACING IN FIRE RATED WALLS. MOUNT LOW VOLTAGE AND POWER OUTLETS IN DIFFERENT STUD WALL CAVITIES. PROVIDE PUTTY PADS AT EACH BOX WHERE A JUNCTION BOX OR OUTLET IS INSTALLED WITHIN THE SAME STUD WALL CAVITY AS ANOTHER OUTLET OR JUNCTION BOX ON THE OTHER SIDE OF THE WALL. PROVIDE PUTTY PADS WHERE REQUIRED TO MAINTAIN THE FIRE RATING OF A WALL.

L. LOCATIONS SHOWN FOR SWITCHES, RECEPTACLES, VOICE/DATA OUTLETS, ETC. ARE GENERAL IN NATURE. COORDINATE EXACT LOCATIONS OF THE DEVICES WITH OWNER AND GENERAL CONTRACTOR PRIOR TO ROUGH-IN. PROVIDE WRITTEN DOCUMENTATION OF THIS COORDINATION TO ENGINEER. IF PROBLEMS ARISE WITH LOCATIONS OF THESE DEVICES BECAUSE CONTRACTOR FAILED TO PERFORM THE COORDINATION NOTED ABOVE, IT SHALL BE THE CONTRACTOR'S SOLE RESPONSIBILITY TO RESOLVE THE ISSUE TO THE ENGINEER AND OWNER'S SATISFACTION.

M. RECEPTACLES WITHIN 6'-0" OF WATER SOURCE SHALL BE A GFI RECEPTACLE.

N. UNLESS NOTED OTHERWISE REFER TO MOTOR SCHEDULE FOR ELECTRICAL REQUIREMENTS FOR MECHANICAL (HVAC, PLUMBING, ETC.) EQUIPMENT. REFER TO DRAWINGS FOR EACH TRADE FOR LOCATION OF EQUIPMENT.

O. PROVIDE NYLON PULL STRING IN EMPTY CONDUIT SYSTEMS FOR USE IN INSTALLING SYSTEM WIRING.

P. COORDINATE LOCATION OF JUNCTION BOX FOR EQUIPMENT WHICH IS FURNISHED BY OWNER OR OTHERS WITH THE EQUIPMENT SUPPLIER PRIOR TO CONSTRUCTION. PROVIDE WIRING FROM JUNCTION BOX TO EQUIPMENT CONNECTION AS REQUIRED.

Q. COORDINATE AT ROUGH-IN THE POWER, DATA/TELEPHONE, SECURITY, AND INTERCOM SYSTEM WITH EQUIPMENT PROVIDED BY OTHERS.

R. REFER TO DRAWINGS FOR LUMINAIRE SCHEDULE.

S. SWITCHING SHOWN ON PLANS DOES NOT SHOW SWITCH LEG/TRACER WIRE BETWEEN SWITCHES. PROVIDE REQUIRED WIRING FOR SWITCHING OF LIGHTING.

T. CONNECT TO THE EXISTING LIGHTING CONTROL SYSTEM. COORDINATE WITH OWNER SWITCHING SEQUENCE OF OPERATION FOR NEW AREA.

GENERAL DEMOLITION NOTES

A. DRAWINGS ARE DIAGRAMMATIC ONLY AND ARE NOT INTENDED TO INDICATE DEVICES OR CONDITIONS ASSOCIATED WITH DEMOLITION. IT SHALL BE THE CONTRACTORS RESPONSIBILITY TO FIELD VERIFY CONDITIONS INVOLVED IN THE DEMOLITION AND SUBSEQUENT RECONSTRUCTION REQUIRED TO COMPLETE THE ELECTRICAL INSTALLATION.

B. CIRCUIT CONTINUITY SHALL BE MAINTAINED TO ELECTRICAL LIGHTING, DEVICES, AND EQUIPMENT REMAINING IN, BUT AFFECTED BY DEMOLITION. FIELD VERIFICATION OF BRANCH CIRCUIT CONFIGURATION SHALL BE THE RESPONSIBILITY OF THE ELECTRICAL CONTRACTOR.

C. IN AREAS OF DEMOLITION, REMOVE ASSOCIATED JUNCTION BOXES, SUPPORTS, CONDUIT AND WIRING TO THE POINT OF ORIGIN FOR LIGHTING, DEVICES AND EQUIPMENT NOT BEING REUSED.

D. REMOVE CONDUIT AND CONDUCTORS BACK TO THE NEAREST JUNCTION BOX FEEDING CIRCUITS BUT MAINTAIN POWER TO EQUIPMENT AND RECEPTACLES THAT WILL REMAIN AFTER DEMOLITION OR REQUIRE POWER DURING DEMOLITION AND CONSTRUCTION.

E. EXISTING CONDUIT INSTALLED IN CONCRETE FLOOR OR WALLS THAT ARE NOT BEING USED IN NEW INSTALLATION SHALL HAVE CONDUIT REMOVED AND HOLES FILLED AND PATCHED. DIV. 26 TO HAVE GENERAL CONTRACTOR DO PATCHING AND PAINTING IN AREAS AS REQUIRED. SEE ARCHITECTURAL TYPICAL DETAIL.

F. COORDINATE THE REMOVAL OF LUMINAIRES, DEVICES, AND EQUIPMENT WITH OTHER CONTRACTORS. DIV. 16/26 RESPONSIBLE FOR REMOVAL AND RELOCATION OF POWER, ELECTRICAL CONTROLS, AND INSTRUMENTATION WIRING OF EQUIPMENT BEING REMOVED AND/OR RELOCATED. COORDINATE REMOVAL AND RELOCATION OF POWER AND CONTROLS OF MECHANICAL EQUIPMENT WITH RESPECTIVE CONTRACTORS.

G. VERIFY EXISTING CONDITIONS BEFORE COMMENCING DEMOLITION OF AREA. ENSURE CIRCUITS REQUIRING POWER AFTER DEMOLITION IS COMPLETED ARE TEMPORARILY CONNECTED UNTIL PERMANENT INSTALLATION IS COMPLETED.

H. COORDINATE DEMOLITION OF EXISTING WALLS WITH GENERAL CONTRACTOR.

I. SEAL OPENINGS IN BOXES AND ENCLOSURES THAT HAVE CONDUIT REMOVED AND OPENINGS ARE NOT REUSED.

J. DEMO ELECTRICAL EQUIPMENT AND DEVICES ENTIRELY, ALL THE WAY BACK TO THE LAST PROTECTIVE DEVICE / CIRCUIT BREAKER TO REMAIN. LABEL AS 'SPARE'. UPDATE ALL SCHEDULES IN PANELS MODIFIED BY DEMOLITION.

CONTACTS

ELECTRICAL CONTACT
Karges-Faulconbridge Inc.
Phone: (651) 771-0880
Fax No.: (651) 771-0878
Contact: Daniel R. Pierce
E-mail: drpierce@kfi-eng.com

This document may be an electronic file or may be printed from an electronic file provided to the user. It is the sole responsibility of the user to ensure that the content and quality is consistent with the content and quality of the paper documents on file at BWBR

Copyright BWBR

Karges-Faulconbridge, Inc.
Engineers
670 COUNTY ROAD B WEST
St. Paul, Minnesota 55113-3911
Tel. (651) 771-0880
Fax (651) 771-0878
E-mail: kfi@kfi-eng.com

B|W|B|R
380 St. Peter Street, Suite 600
Saint Paul, MN 55102
651.222.3701 bwbr.com

Name MARK E. SVENKESON
Date APR 25, 2016
Reg. No. 33474

I hereby certify that this plan, specification or report was prepared by me or under my direct supervision and that I am a duly Licensed Engineer under the laws of the State of Wisconsin

Issued for	Date
95% CD	04/15/2016
CD ISSUE	04/25/2016

Drawn	Date
DRP	APR 25, 2016
Checked	Comm. No.
MES	CD ISSUE

Sheet Title
ELECTRICAL PLAN
GENERAL NOTES

Sheet No.
900.1

ELECTRICAL SYBMOLS

SYMBOL	DESCRIPTION	MTG. HEIGHT
	GENERAL	
3 / E201	DETAIL NUMBER / SHEET NUMBER	
#	ELECTRICAL KEYED NOTE NUMBER	
	INDICATES ALL DEVICES UNDER ONE COVERPLATE	
	LIGHTING SYSTEM	
	RECESSED MOUNTED LUMINAIRE	CLG.
	RECESSED MOUNTED EMERGENCY LUMINAIRE	CLG.
	SURFACE MOUNTED LUMINAIRE	CLG.
	SURFACE WALL MOUNTED LUMINAIRE	
	BATTERY POWERED EMERGENCY LIGHTING UNIT. SEE LUMINAIRE SCHEDULE FOR DESCRIPTION.	7'-6"
	EXIT LIGHT OUTLET IN WALL. SHADED QUADRANT DENOTES FACE DIRECTION	80"
	EXIT LIGHT OUTLET IN CEILING. SHADED QUADRANT DENOTES FACE DIRECTION	CLG.
OC DT U PI	OCCUPANCY SENSOR-CEILING MOUNTED DT DUAL TECHNOLOGY U ULTRASONIC PI PASSIVE INFRARED	VERIFY
OC	OCCUPANCY SENSOR-WALL MOUNTED	48"
LS	DAY-LIGHT SENSOR	CLG.
$	SINGLE POLE SWITCH	48"

SYMBOL	DESCRIPTION	MTG. HEIGHT
	POWER SYSTEM	
	LIGHTING AND BRANCH CIRCUIT PANELBOARD RECESSED MTD	TOP 72"
	LIGHTING AND BRANCH CIRCUIT PANELBOARD SURFACT MTD	TOP 72"
P1	MOTOR/EQUIPMENT P1 DESIGNATION REFER EQUIPMENT SCHEDULE	
	DUPLEX RECEPTACLE	18"
	CEILING MOUNTED DUPLEX / QUAD RECEPTACLE	CLG
	QUAD RECEPTACLE	18"
	ABOVE COUNTER DUPLEX/QUAD RECEPTACLE	
	ABOVE COUNTER GFI DUPLEX/QUAD RECEPT.	
	GFI DUPLEX/QUAD RECEPTACLE	18" 24" WP
J	JUNCTION BOX	
J	WALL MOUNTED JUNCTION BOX	
	TECHNOLOGY SYSTEM	
	DATA OUTLET	18"
	TELEPHONE/DATA OUTLET	18"
S	WALL SPEAKER	7'-6"
S	CEILING SPEAKER	CLG.
	IP VIDEO SURVEILLANCE CAMERA	
IC	INTERCOM	48"
	FIRE ALARM SYSTEM	
F	WALL MOUNT HORN AND STROBE	80"
F S	CEILING MOUNTED SMOKE DETECTOR	CLG.
F	CEILING MOUNTED STROBE LIGHT	CLG.
F	CEILING MOUNTED HORN AND STROBE	CLG.
F SD	SMOKE DAMPER	

ELECTRICAL SYMBOL SCHEDULE NOTES

1. THESE SYMBOLS COMPRISE A STANDARD LIST, NOT ALL SYMBOLS MAY APPEAR ON THESE DRAWINGS.
2. MOUNTING HEIGHTS INDICATED ARE FOR STUD WALL CONSTRUCTION. WHEN BLOCK OR BRICK CONSTRUCTION IS USED, ADJUST MOUNTING HEIGHTS TO ALIGN DEVICES OR DEVICE PLATES WITH RUNNING JOINT.
3. MOUNTING HEIGHTS ARE TO CENTER OF DEVICE ABOVE FINISHED FLOOR. MOUNTING HEIGHTS INDICATED ON ARCHITECTURAL WALL ELEVATIONS OR AS NOTED SPECIFICALLY ON THE DRAWINGS SHALL TAKE PRECEDENCE OVER MOUNTING HEIGHTS LISTED.
4. PROVIDE TWO GANG BOX WITH SINGLE DEVICE MUD RING AND 1 1/4" CONDUIT STUBBED INTO ACCESSIBLE CEILING SPACE AS REQUIRED FOR ROUGH-IN OF LOW VOLTAGE/TECHNOLOGY SYSTEM OUTLET LOCATIONS.
5. REFER TO CONSTRUCTION DRAWINGS AND SCHEDULES FOR ADDITIONAL INFORMATION.

ELECTRICAL ABBREVIATIONS

A or AMP	AMPERE
AB	ABOVE BACKSPLASH
AC	ABOVE COUNTER
A/C	AIR CONDITIONING
ADA	AMERICAN DISABILITY ACT
ADD	ADDENDUM
ADJ	ADJACENT
ADJS	ADJUSTABLE
AFF	ABOVE FINISHED FLOOR
AHU	AIR HANDLING UNIT
AIC	AMPERE INTERRUPTING CAPACITY
ALT	ALTERNATE
AL	ALUMINUM
AMP	AMPLIFIER
APPROX	APPROXIMATELY
ARC	ARC FAULT
ARCH	ARCHITECT
AUTO	AUTOMATIC
BMS	BUILDING MANAGEMENT SYSTEM
C	CONDUIT
CAB	CABINET
CB	CIRCUIT BREAKER
CLG	CEILING
CCT	CIRCUIT
CCTV	CLOSED CIRCUIT CAMERA/TV
COND	CONDUCTOR
CONT	CONTACTOR
CONTR	CONTRACTOR
CR	CRITICAL
CTR	COUNTER
CU	COPPER
DC	DIRECT CURRENT
DET	DETAIL
DIA	DIAMETER
DS	DISCONNECT
DN	DOWN
DWG	DRAWING
EA	EACH
EC	ELECTRICAL CONTRACTOR
EF	EXHAUST FAN
EH	ELECTRIC HEAT
ELEC	ELECTRIC (-AL)
ELEV	ELEVATOR/ELEVATION
EMERG	EMERGENCY
EMT	ELECTRICAL METALLIC TUBING
ENCL	ENCLOSURE
EP	ELECTRIC PNEUMATIC
EPO	EMERGENCY POWER OFF
EQUIP	EQUIPMENT
EWC	ELECTRIC WATER COOLER
EXH	EXHAUST
EXIST	EXISTING
F	FUSE
FA	FIRE ALARM
FC	FOOT CANDLE
FCU	FAN COIL UNIT
FIN	FINISHED
FLOUR	FLUORESCENT
FLR	FLOOR
FREQ	FREQUENCY
FSD	FIRE SMOKE DAMPER
FSS	FUSED SAFETY SWITCH
FVNR	FULL VOLTAGE NON-REVERSING
FVR	FULL VOLTAGE REVERSING
GC	GENERAL CONTRACTOR
GEN	GENERATOR
GFI	GROUND FAULT INTERRUPTER
GR	GRADE
GRC	GALVANIZED RIGID CONDUIT
GRD or G	GROUND

HC	HANDICAP
HOA	HAND-OFF AUTO SWITCH
HOR	HORIZONTAL
HP	HORSEPOWER
HT	HEIGHT
HTR	HEATER
HZ	HERTZ
IG	ISOLATED GROUND
INC	INCANDESCENT
INSUL	INSULATION
J-BOX	JUNCTION BOX
KV	KILOVOLT
KVA	KILOVOLT-AMPERE
KW	KILOWATT
KWH	KILOWATT HOUR
LED	LIGHT EMITTING DIODE
LS	LIFE SAFETY
LTG	LIGHTING
MAX	MAXIMUM
MC	MOMENTARY CONTACT
MCA	MINIMUM CIRCUIT AMPERE
MCC	MOTOR CONTROL CENTER
MCP	MOTOR CIRCUIT PROTECTOR
MECH	MECHANICAL
MEZZ	MEZZANINE
MFR	MANUFACTURER
MH	METAL HALIDE
MIC	MICROPHONE
MIN	MINIMUM
MS	MAGNETIC STARTER
MSS	MOTOR SENTINEL SWITCH
MT	EMPTY
MTD	MOUNTED
MTR	MOTOR
NEC	NATIONAL ELECTRICAL CODE
NF	NON-FUSED
NFS	NON-FUSED SAFETY SWITCH
NIC	NOT IN CONTRACT
NL	NIGHT LIGHT
NTS	NOT TO SCALE
NO or #	NUMBER
OC	ON CENTER
OD	OUTSIDE DIAMETER
OLSW	OVERLOAD SWITCH
PB	PUSHBUTTON
PF	POWER FACTOR
PH or Ø	PHASE
PL	PILOT LIGHT
PNL	PANEL
PR	PAIR
PRI	PRIMARY
PRV	POWER ROOF VENTILATOR
PVC	POLYVINYL CHLORIDE CONDUIT
REC	RECESSED
RCPT	RECEPTACLE
REFR	REFRIGERATOR
REQD	REQUIRED
RM	ROOM
RMS	ROOT MEAN SQUARE
RPM	REVOLUTIONS PER MINUTE
RTU	ROOF TOP UNIT

SEC	SECONDARY
SHT	SHEET
SPKR	SPEAKER
SPEC	SPECIFICATIONS
SQ	SQUARE
SS	STAINLESS STEEL
STD	STANDARD
SUSP	SUSPENDED
SW	SWITCH
SWBD	SWITCHBOARD
TEL	TELEPHONE
TEMP	TEMPERATURE
TS	TOGGLE SWITCH
TSTAT	THERMOSTAT
TYP	TYPICAL
UC	UNDER COUNTER
UG	UNDERGROUND
UH	UNIT HEATER
UL	UNDERWRITERS LABORATORY
UNO	UNLESS NOTED OTHERWISE
V	VOLT
VA	VOLT AMPERE
VENT	VENTILATE (-ING OR -ION)
VERT	VERTICAL
VFD	VARIABLE FREQUENCY DRIVE
VOL	VOLUME
W	WATT
WP	WEATHERPROOF
W/	WITH
W/O	WITHOUT
XFMR	TRANSFORMER

Karger-Fauldconbridge,Inc.
Engineers
670 COUNTY ROAD B WEST
ST. PAUL, MINNESOTA 55113
Tel. (651) 771-0850
Fax (651) 772-2778
E-mail: kfi@kfi-eng.com

B|W|B|R
380 St. Peter Street, Suite 600
Saint Paul, MN 55102
651.222.3701 bwbr.com

Name MARK E. SVENKESON
Date APR 25, 2016
Reg. No. 33474

I hereby certify that this plan, specification or report was prepared by me or under my direct supervision and that I am a duly Licensed Engineer under the laws of the State of Wisconsin

Issued for	Date
95% CD	04/15/2016
CD ISSUE	04/25/2016

Drawn DRP
Checked MES
Date APR 25, 2016
Comm. No.
CD ISSUE

Sheet Title
ELECTRICAL SYMBOLS AND ABBREVIATIONS

Sheet No.
900.2

Copyright BWBR

This document may be an electronic file or may be printed from an electronic file provided to the user. It is the sole responsibility of the user to ensure that the content and quality is consistent with the content and quality of the paper documents on file at BWBR

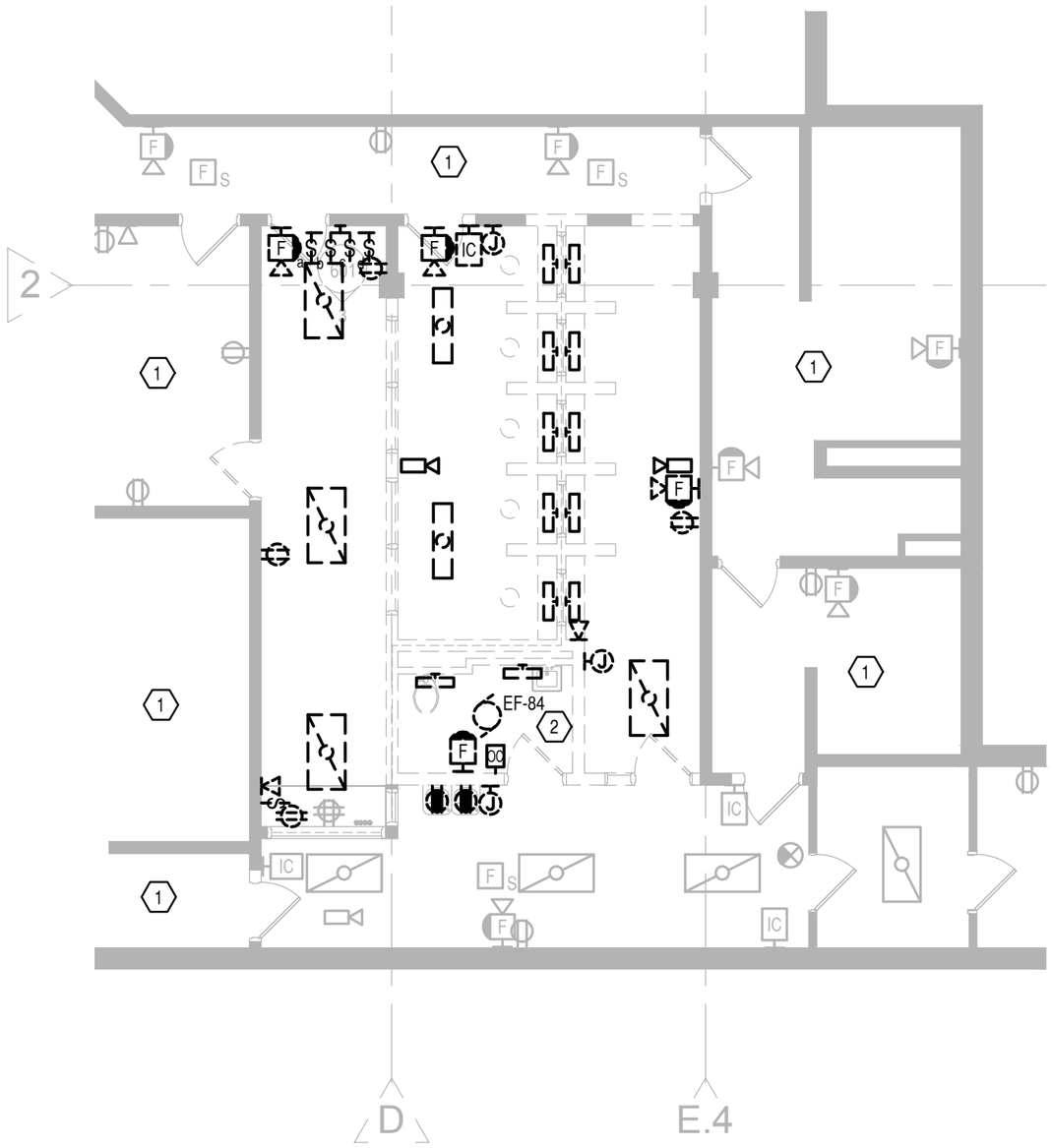

1 ELECTRICAL DEMOLITION PLAN
901.D 1/8"=1'-0"

DEMOLITION NOTES:

A. DEMOLISH ALL CONDUIT, WIRES, AND DEVICES IN/ON WALLS BEING DEMOLISHED. DISPOSE OF ALL DEMOLISHED MATERIALS PROPERLY.

B. REFER TO SECURITY DRAWING FOR SECURITY EQUIPMENT TO THE DEMOLISHED.

DEMOLITION KEYED NOTES:

1. NO DEMOLITION WORK IN THIS AREA UNLESS NOTED OTHERWISE. MAINTAIN AND PROTECT THE CONTINUITY OF THE EXISTING ELECTRICAL DEVICES.

2. DISCONNECT EXISTING EXHAUST FAN (EF-84) AND DISCONNECT. MAINTAIN EXISTING CIRCUIT TO RECONNECT AT NEW LOCATION. THE EXHAUST FAN IS LABELED IN THE PANELBORD AS EF-6.

This document may be an electronic file or may be printed from an electronic file provided to the user. It is the sole responsibility of the user to ensure that the content and quality is consistent with the content and quality of the paper documents on file at BWBR

Karger-Fauldconbridge,Inc.
Engineers
670 COUNTY ROAD B WEST
ST. PAUL, MINNESOTA 55113
Tel. (651) 771-0850
Fax (651) 772-2078
E-mail: kfi@kfi-eng.com

B|W|B|R
380 St. Peter Street, Suite 600
Saint Paul, MN 55102
651.222.3701 bwbr.com

Name MARK E. SVENKESON
Date APR 25, 2016
Reg. No. 33474

I hereby certify that this plan, specification or report was prepared by me or under my direct supervision and that I am a duly Licensed Engineer under the laws of the State of Wisconsin

Issued for	Date
95% CD	04/15/2016
CD ISSUE	04/25/2016

Drawn DRP
Checked MES

Date APR 25, 2016
Comm. No.
CD ISSUE

Sheet Title
ELECTRICAL DEMOLITION PLAN

Sheet No.
901.D

Copyright BWBR

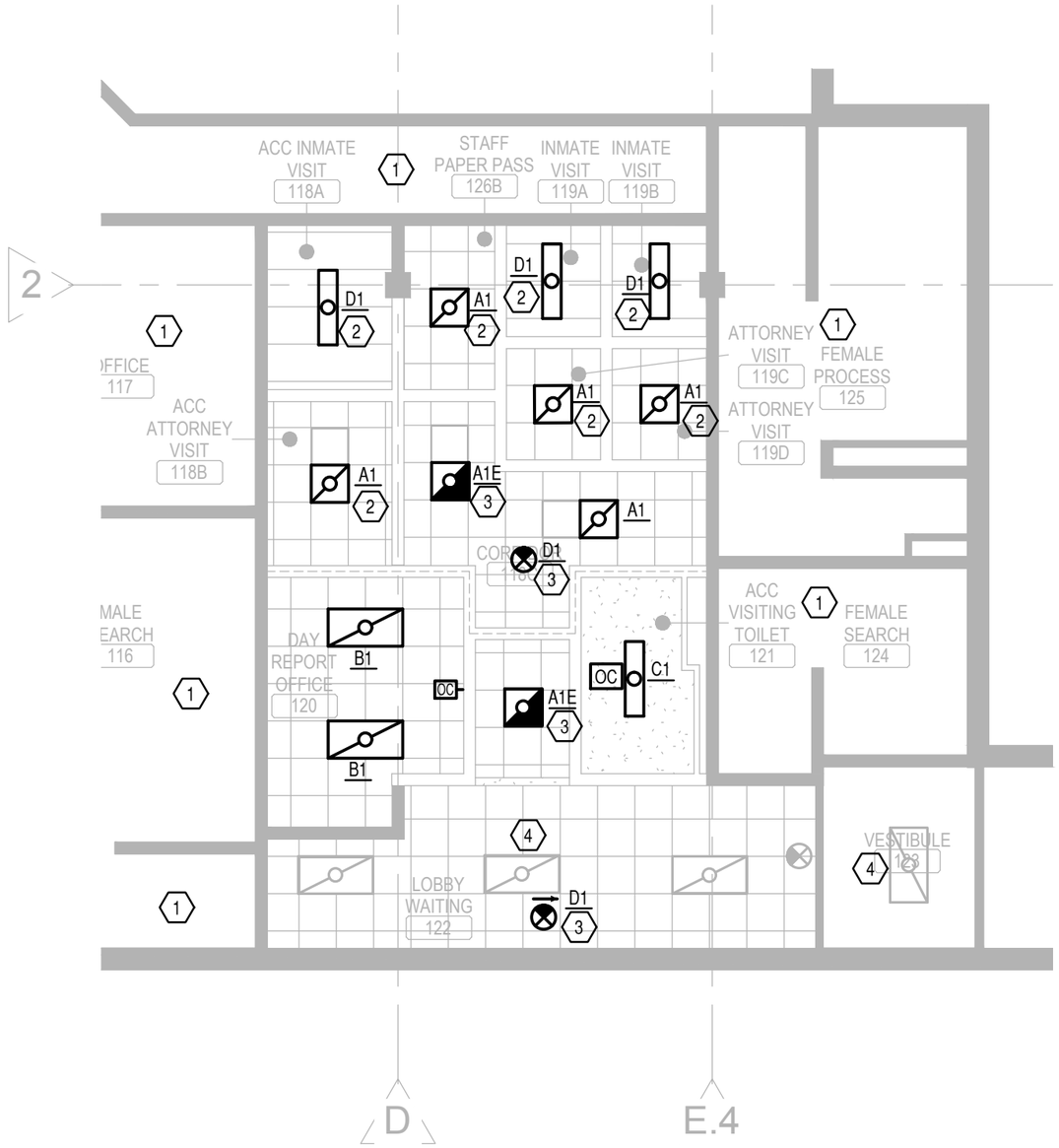

2 NEW LIGHTING PLAN
901.L 1/8"=1'-0"

GENERAL NOTES:

A. ALL LUMINARES SHALL BE SUPPORTED FROM STRUCTURE.

B. CONNECT LIGHTING CONTROLS TO THE EXISTING LIGHTING CONTROL SYSTEM.

C. CONNECT LUMINAIRE TO THE EXISTING CIRCUIT L/LS-2, UNLESS NOTED OTHERWISE.

KEYED NOTES:

1. NO WORK TO BE DONE IN THIS AREA UNLESS OTHERWISE NOTED.
2. LUMINARE TO BE CONTROLLED AT MASTER CONTROL CENTER.
3. CONNECT LUMINARE TO CIRCUIT L/LS-1
4. PROVIDE AN EMERGENCY BATTERY PACK FOR EGRESS LIGHTING TO THE EXISTING LUMINARE.

Karger-Faulconbridge, Inc.
Engineers
670 COUNTY ROAD B WEST
St. Paul, Minnesota 55113
Tel. (651) 771-0850
Fax (651) 772-0976
E-mail: kfi@kfi-eng.com

BWBR
380 St. Peter Street, Suite 600
Saint Paul, MN 55102
651.222.3701 bwbr.com

Name MARK E. SVENKESON
Date APR 25, 2016
Reg. No. 33474

I hereby certify that this plan, specification or report was prepared by me or under my direct supervision and that I am a duly Licensed Engineer under the laws of the State of Wisconsin

Issued for	Date
95% CD	04/15/2016
CD ISSUE	04/25/2016

Drawn DRP
Checked MES

Date APR 25, 2016
Comm. No.
CD ISSUE

Sheet Title
ELECTRICAL LIGHTING PLAN

Sheet No.
901.L

Copyright BWBR

This document may be an electronic file or may be printed from an electronic file provided to the user. It is the sole responsibility of the user to ensure that the content and quality is consistent with the content and quality of the paper documents on file at BWBR

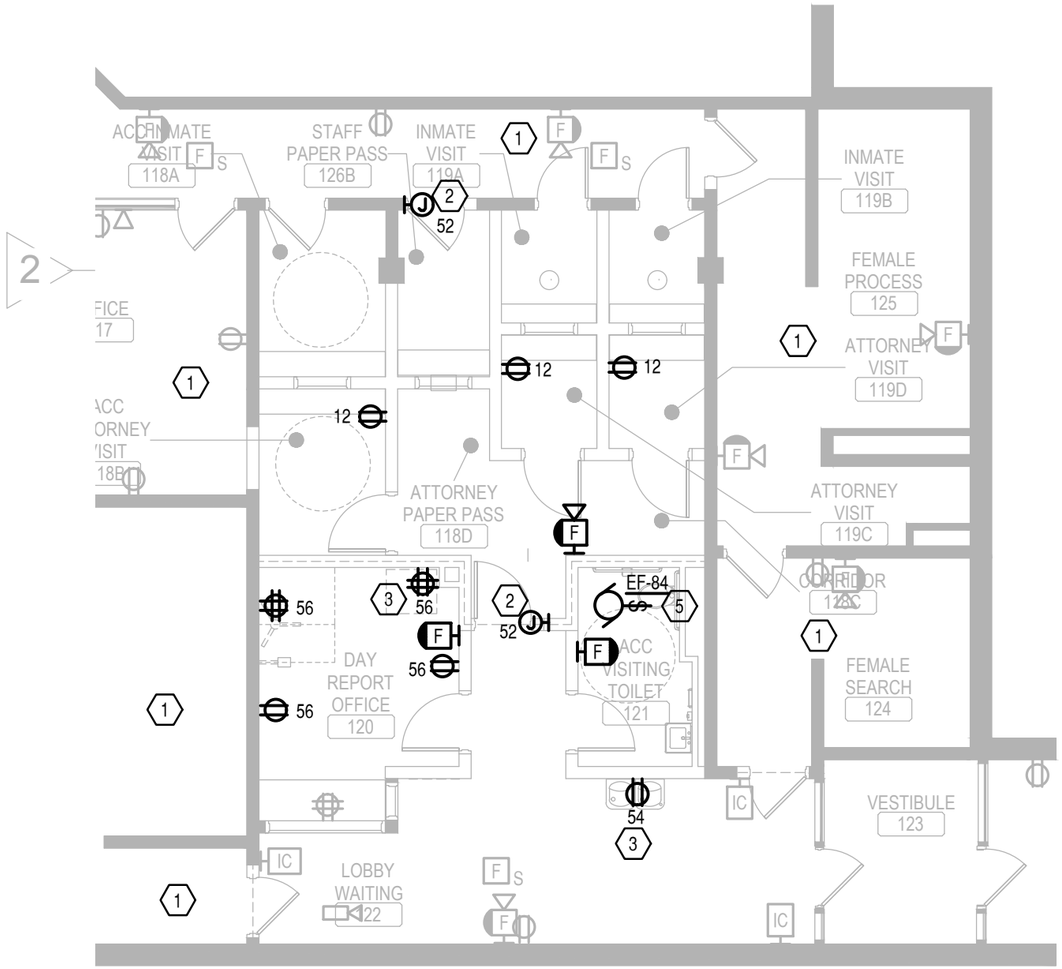

1
901.P

POWER PLAN

1/8"=1'-0"

KEYED NOTES:

1. NO WORK TO BE DONE IN THIS AREA UNLESS OTHERWISE NOTED.
2. PROVIDE POWER AS NEEDED TO FOR SECURITY DOOR. COORDINATE WITH THE DOOR HARDWARE AND SECURITY CONTRACTOR.
3. COORDINATE ON ROUGH-IN EXACT LOCATION OF RECEPTACLE WITH EQUIPMENT PROVIDED BY OTHERS.
4. PROVIDE A GFCI CIRCUIT BREAKER FOR ELECTRICAL WATER COOLER.
5. NEW LOCATION OF EXHAUST FAN (EF-84) AND DISCONNECT. THIS IS ALSO LABELED AS EF-6 IN PANELBOARD RP. EXTEND THE EXISTING CIRCUIT TO THIS LOCATION. RELABEL THE PANELBOARD TO BE EF-84. COORDINATE THE INSTALLATION WITH THE MECHANICAL CONTRACTOR.

GENERAL NOTES:

A. SECURITY, DATA/TELEPHONE, AND INTERCOM SYSTEM BY OTHERS. COORDINATE ROUGH-IN WITH THE TECHNOLOGY DRAWING AND TECHNOLOGY CONTRACTOR.

B. ALL STATE COMMUNICATION TO PERFORM INTEGRATION OF FIRE/SMOKE DETECTION. PROVIDE FIRE ALARM AND DETECTION TO MEET ALL STATE, CITY CODES.

C. CONNECT TO PANELBOARD RP. FIELD VERIFY CAPACITY AND SPACE AVAILABLE. FIELD VERIFY CIRCUIT NUMBER WITH AVAILABLE SPACE WITHIN PANELBORAD.

D. COORDINATE ALL POWER AND/OR RACEWAY REQUIREMENTS WITH THE DOOR HARDWARE SCHEDULE. PROVIDE POWER AND/OR RACEWAYS NEEDED TO OPERATE DOORS AS SCHEDULED.

Karger-Faulconbridge, Inc.
Engineers
673 COUNTY ROAD B WEST
St. Paul, Minnesota 55113
Tel. (651) 777-0850
Fax (651) 777-0875
E-mail: kf@kf-eng.com

BWBR
380 St. Peter Street, Suite 600
Saint Paul, MN 55102
651.222.3701 bwbr.com

Name MARK E. SVENKESON
Date APR 25, 2016
Reg. No. 33474

I hereby certify that this plan, specification or report was prepared by me or under my direct supervision and that I am a duly Licensed Engineer under the laws of the State of Wisconsin

Issued for	Date
95% CD	04/15/2016
CD ISSUE	04/25/2016

Drawn DRP
Checked MES

Date APR 25, 2016
Comm. No. CD ISSUE

Sheet Title
ELECTRICAL POWER PLAN

Sheet No.
901.P

Copyright BWBR

This document may be an electronic file or may be printed from an electronic file provided to the user. It is the sole responsibility of the user to ensure that the content and quality is consistent with the content and quality of the paper documents on file at BWBR

LUMINAIRE SCHEDULE SD QMF 08-1003: 2

LUMINAIRE LETTER	LUMINAIRE DESCRIPTION	VOLTS	MOUNTING	LAMPS	BALLAST	CONTROL MEDIA (LENS, LOUVERS,	CATALOG NUMBER	NOTES
A1	2x2 ARCHITECTURAL DIRECT/INDIRECT BASKET LOW PROFILE RECESSED LAY-IN LED FIXUTE. HIGH REFLECTANCE WHITE PAINTED UNIFORMED INDIRECT LIGHT DISTRIBUTION.	120-277V	RECESSED	LED 3900 LUMENS, 3500K	0-10V DIMMING DRIVER	DIRECT/ INDIRECT UNIFORM INDIRECT	JUNO INDY: S2X2BL-3935U-WH-3 OR APPROVED EQUAL	
A1E	2x2 ARCHITECTURAL DIRECT/INDIRECT BASKET LOW PROFILE RECESSED LAY-IN LED FIXUTE. HIGH REFLECTANCE WHITE PAINTED UNIFORMED INDIRECT LIGHT DISTRIBUTION.	120-277V	RECESSED	LED 3900 LUMENS, 3500K	0-10V DIMMING DRIVER, WITH EMERGENCY BATTERY PACK	DIRECT/ INDIRECT UNIFORM INDIRECT	JUNO INDY: S2X2BL-3935U-WH-3-BR OR APPROVED EQUAL	
B1	2x4 ARCHITECTURAL DIRECT/INDIRECT BASKET LOW PROFILE RECESSED LAY-IN LED FIXUTE. HIGH REFLECTANCE WHITE PAINTED UNIFORMED INDIRECT LIGHT DISTRIBUTION.	120-277V	RECESSED	LED 3900 LUMENS, 3500K	0-10V DIMMING DRIVER	DIRECT/ INDIRECT UNIFORM INDIRECT	JUNO INDY: S2X2BL-3935U-WH3 OR APPROVED EQUAL	
C1	1X4 SURFACE MOUNTED LED. SECURITY DETENTION APPLICATION. ONE-PIECE DIE-FORMED PRIME GRADE MATERIAL SEAM WELDED AND SMOOTH WITH NO POST GRINDING.	120-277V	CEILING SURFACE	LED 3900 LUMENS, 3500K	LED DRIVER	.500" THICK POLYCARBONATE LENS.	KENALL: SDSA-4-2-XXL35K-DV-J-1	1
D1	SURFACE MOUNTED LED EXIT SIGN. ONE PIECE DIE-FORMED 14 GAUGE MATERIAL. HARDENED SECURITY SCREWS POLESTER POWDER COATED. RED LETTERING	120-277V	CEILING OR WALL SURFACE	LED	SEALED NICKEL CADMIUM BATTERY PACK	RED LETTERING	KENALL: MMEX-1-0-G-DT-1	

GENERAL NOTES:

A. LUMINAIRE MANUFACTURERS INDICATED BY SERIES SHALL MATCH LUMINAIRE MANUFACTURER WITH FULL CATALOG NUMBER GIVEN.
B. LUMINAIRES SHALL BE PAINTED AFTER FABRICATION (PAF).
C. ACRYLIC LENS SHALL BE .125 MINIMUM THICKNESS.
D. BALLASTS SHALL BE MULTI-VOLTAGE TYPE WHEN AVAILABLE.
E. EXPOSED SURFACES OF LUMINAIRES SHALL BE WHITE, PAINTED AFTER FABRICATION (PAF), UNLESS NOTED OTHERWISE.
F. LUMINAIRES SHALL BE CONNECTED TO THE EXISTING LIGHTING CONTROL SYSTEM.

NOTES:

1. FIXURE SHALL BE TAMPER RESISTANT AND RATED FOR AREA INSTALLED IN.

This document may be an electronic file or may be printed from an electronic file provided to the user. It is the sole responsibility of the user to ensure that the content and quality is consistent with the content and quality of the paper documents on file at BWBR

Karger-Fitzsimmons/Inc. Engineers
670 COUNTY ROAD B WEST
ST. PAUL, MINNESOTA 55113
Tel. (651) 771-0850
Fax (651) 772-2778
E-mail: kfi@kfi-eng.com

B|W|B|R
380 St. Peter Street, Suite 600
Saint Paul, MN 55102
651.222.3701 bwbr.com

Name MARK E. SVENKESON
Date APR 25, 2016
Reg. No. 33474

I hereby certify that this plan, specification or report was prepared by me or under my direct supervision and that I am a duly Licensed Engineer under the laws of the State of Wisconsin

Date	Issued for	Date
APR 25, 2016	95% CD	04/15/2016
Comm. No.	CD ISSUE	04/25/2016
CD ISSUE		

Drawn DRP
Checked MES

Sheet Title
ELECTRICAL LUMINIARE SCHEDULE

Sheet No.
970

Copyright BWBR

St. Croix County Jail - Huber Center Visitation Area Remodel

COMMISSION NO. 3.2014062.00

95% CONSTRUCTION DOCUMENTS 04/15/2015

Sheet List Table

Sheet Number	Sheet Title
SC000	SECURITY - INDEX SHEET
SC201	SECURITY - FIRST FLOOR
SC201.D	SECURITY - FIRST FLOOR - DEMOLITION PLAN
SC500	SECURITY - DETAILS AND SECURITY SCHEDULES

General Notes

1. All cables shall be concealed.
2. All conduit measurements refer to standard conduit trade sizes.
3. Not all keynotes may be utilized on every sheet.
4. It is the intent that each contractor include all required materials for a neatly dressed cabling pathway system as indicated on these drawings and specifications. All required materials shall be included proposal.
5. Contractor shall provide and install all necessary sleeves, whether or not specifically noted on project drawings. All sleeves shall be 1-1/4" unless noted otherwise on the drawings. Cable fill percentage shall comply with NEC.
6. Contractor shall make necessary adjustments in J-hook support paths to avoid conflicts with HVAC and electrical devices/equipment and work of other trades.
7. Everything shown on the drawings shall be provided and installed by the appropriate contractor unless noted otherwise. All Conduit, Backboxes, Junction Boxes, Floor Boxes and In-Wall Boxes shall be provided by this Contractor unless noted otherwise.

Technology Legend

IC — Intercom Location (RIO)

DC — Door Contact (RIO), may be integrated into lockset

C — Fixed Surveillance Camera (RIO)
*#-##

EH — Electrified Hardware

Camera (N)ew, (E)xisting Rough-in, (D)emo
Proposed Camera Direction

*#-## — Camera Schedule Number (Floor #-Camera #)

General Legend

(#/T#.#) — Detail Reference (Detail# / Sheet Number)

NORTH — North Arrow

— Keynotes

AFF	Above Finished Floor
UNO	Unless Otherwise Noted
PBO	Provided by Others
RIO	Rough-In Only

HUBER CENTER
VISITATION AREA REMODEL
St. Croix Country Jail
Hudson, Wisconsin

BWBR
380 St. Peter Street, Suite 600
Saint Paul, MN 55102
651.222.3701 bwbr.com

elert & associates
140 Third Street South
Stillwater, MN 55082
651.430.2772 fax: 651.430.2661

Drawn	JM	Issued for	Date
Checked	BF	95 % CD	04/15/16
		100 % CD	04/25/16

Sheet Title: SECURITY - INDEX SHEET
Date: 04/25/16
Comm. No. 3.2015141.01
Sheet No. SC000

Copyright BWBR

4/7/2016 9:42:08 AM
This document may be an electronic file or may be printed from an electronic file provided to the user. It is the sole responsibility of the user to ensure that the content and quality is consistent with the content and quality of the paper document on file at BWBR.

This document may be an electronic file or may be printed from an electronic file provided to the user. It is the sole responsibility of the user to ensure that the content and quality is consistent with the content and quality of the paper document on file at BWBR.

4/7/2016 9:42:08 AM

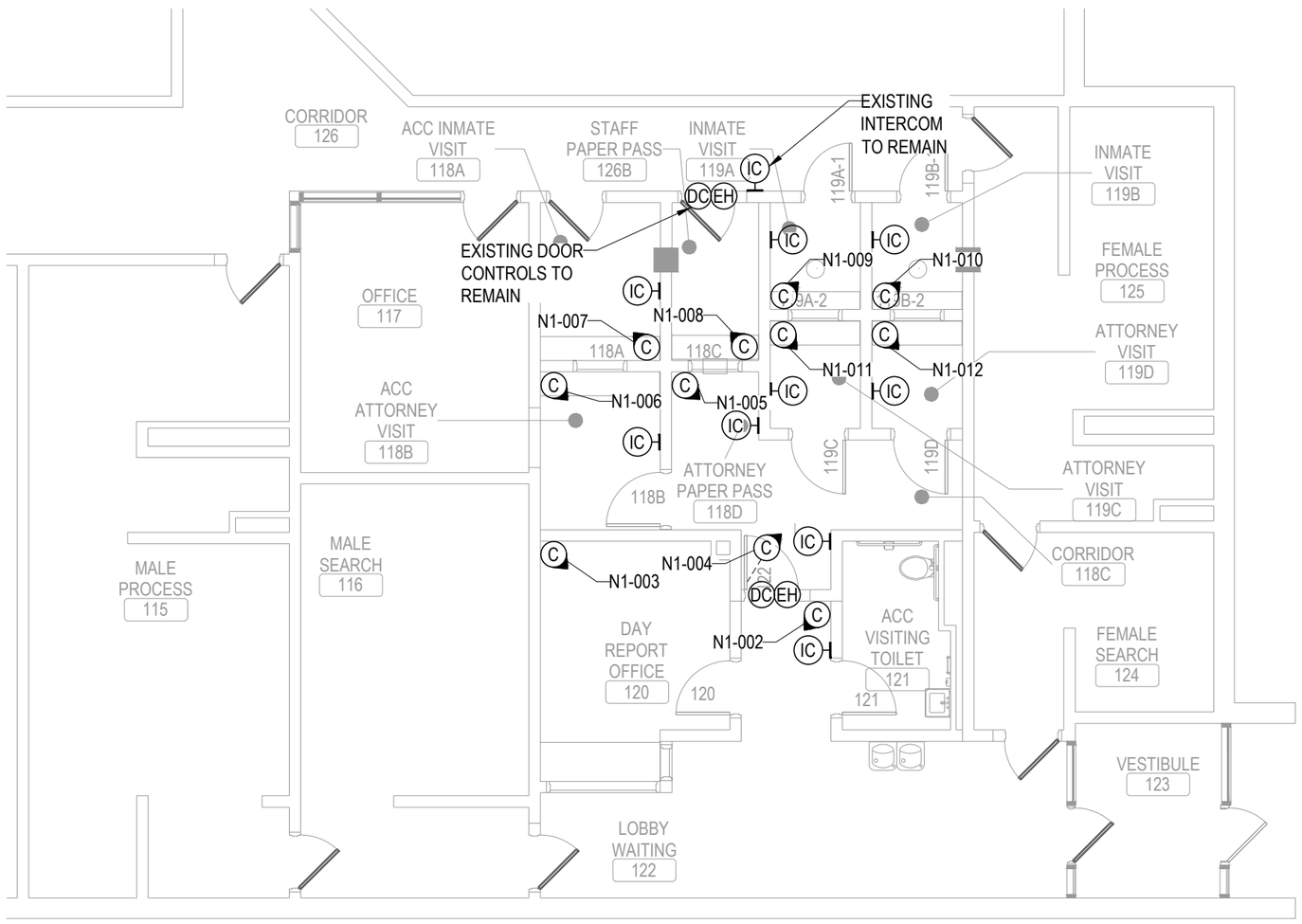

NORTH

1 SECURITY - FIRST FLOOR

SCALE: 1/8"=1'-0" NOTE: FOR ROUGH-IN ONLY

HUBER CENTER
VISITATION AREA REMODEL
St. Croix Country Jail
Hudson, Wisconsin

B|W|B|R
380 St. Peter Street, Suite 600
Saint Paul, MN 55102
651.222.3701 bwbr.com

elert & associates
140 Third Street South
Stillwater, MN 55082
651.430.2772 fax: 651.430.2661

Issued for	Date
95 % CD	04/15/16
100 % CD	04/25/16

Drawn JM
Checked BF

Date 04/25/16
Comm. No. 3.20151141.01

Sheet Title SECURITY - FIRST FLOOR

Sheet No. SC201

Copyright BWBR

This document may be an electronic file or may be printed from an electronic file provided to the user. It is the sole responsibility of the user to ensure that the content and quality is consistent with the content and quality of the paper document on file at BWBR.

4/7/2016 9:42:08 AM

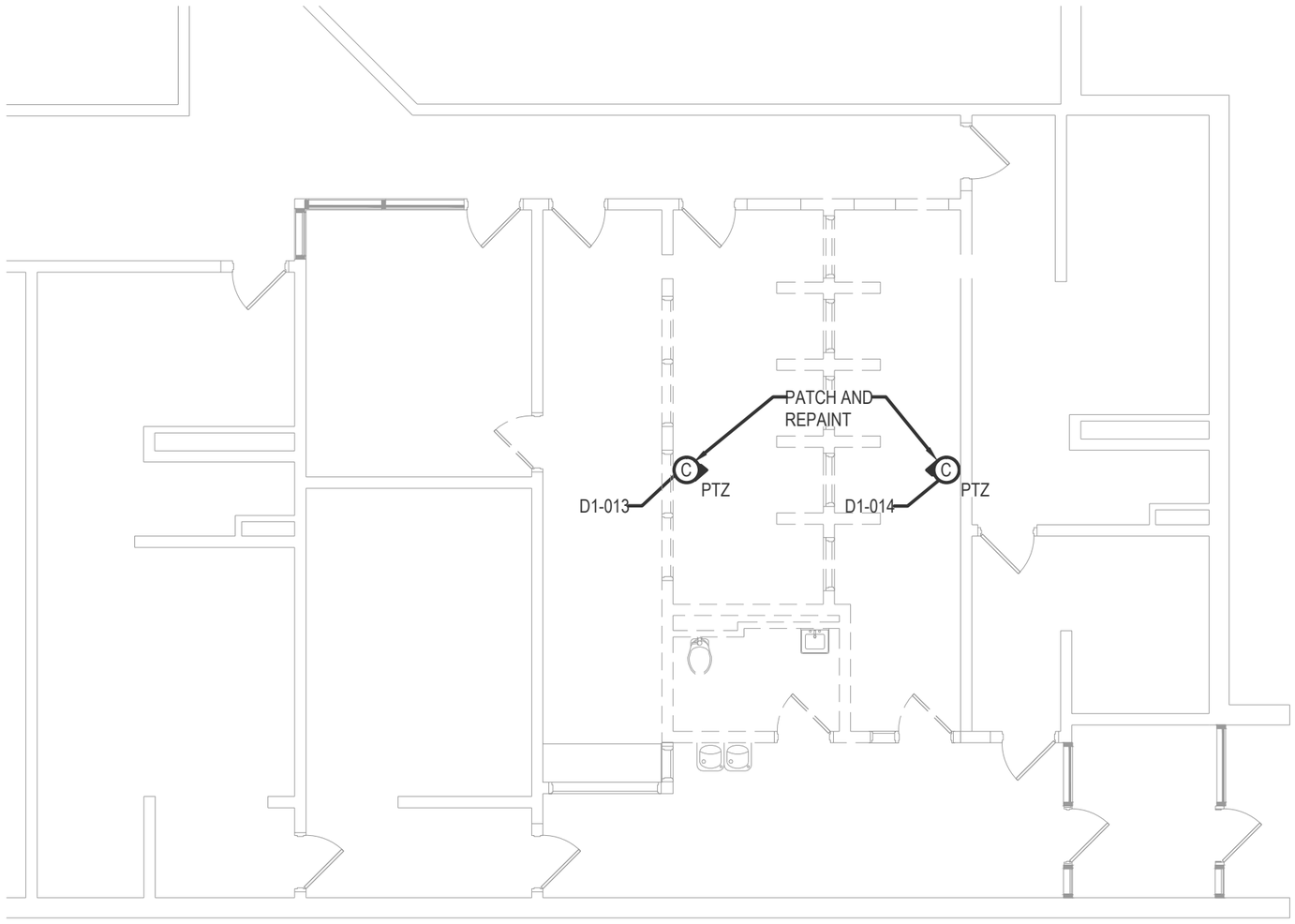

NORTH

1 SECURITY - FIRST FLOOR - DEMOLITION PLAN

SCALE: 1/8"=1'-0" NOTE: FOR ROUGH-IN ONLY

elert & associates
140 Third Street South
Stillwater, MN 55082
651.430.2772 fax: 651.430.2661

BWBR
380 St. Peter Street, Suite 600
Saint Paul, MN 55102
651.222.3701 bwbr.com

HUBER CENTER
VISITATION AREA REMODEL
St. Croix Country Jail
Hudson, Wisconsin

Issued for	Date
95 % CD	04/15/16
100 % CD	04/25/16

Drawn JM
Checked BF

Date 04/25/16
Comm. No. 3.2015141.01

Sheet Title
SECURITY - FIRST FLOOR - DEMOLITION PLAN

Sheet No. SC201.D

Copyright BWBR

GENERAL NOTES:

1. ALL CABLES FROM CAMERAS SHALL BE INSTALLED IN CONDUIT.
2. ALL MOUNTING DETAILS ARE REFERENCE FOR ALL FIXED DOME, 180°, 360°, PTZ, AND "BULLET/BOX" CAMERAS.
3. ALL DEVICE LOCATIONS REQUIRE BACK-BOX AND CONCEALED CONDUIT ROUTED WITHIN WALL TO CEILING AREA. CONTINUOUS CONDUITS SECTIONS SHALL BE PROVIDED AT ALL AREAS EXPOSED TO PUBLIC VIEW OR AREAS WITH ROUTINGS ACROSS INACCESSIBLE CEILINGS. J-HOOKS CAN BE PROVIDED ABOVE ACCESSIBLE CEILING AREAS. CONDUIT SLEEVES SHALL BE PROVIDED THRU WALLS.

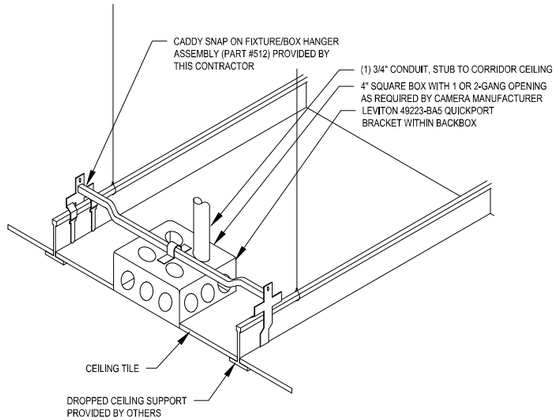

1 TYPICAL TILE BRIDGE SUPPORT DETAIL
SCALE: NS NOTE: FOR ROUGH-IN ONLY

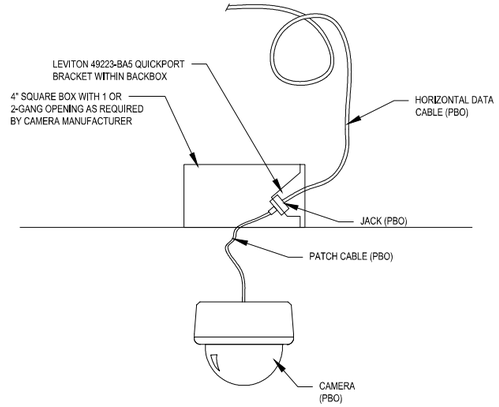

2 TYPICAL CAMERA INSTALLATION SECTION DETAIL
SCALE: NS NOTE: FOR ROUGH-IN ONLY

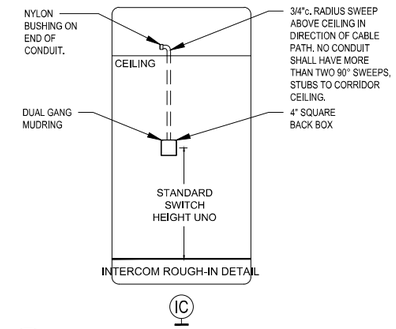

3 DATA ROUGH-IN DETAILS
SCALE: NS NOTE: FOR LOCATIONS REQUIRING FACEPLATE

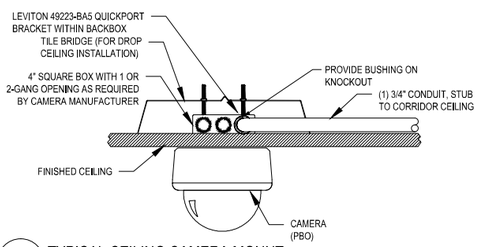

5 TYPICAL CEILING CAMERA MOUNT
SCALE: NS NOTE: FOR ROUGH-IN ONLY

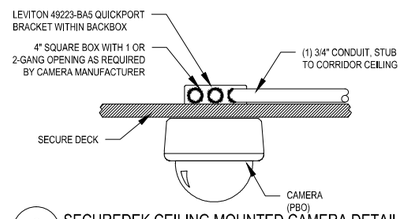

6 SECUREDEK CEILING MOUNTED CAMERA DETAIL
SCALE: NS NOTE: FOR ROUGH-IN ONLY

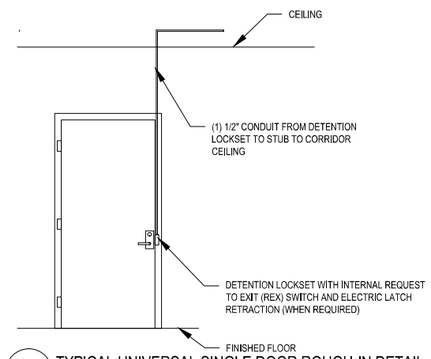

8 TYPICAL UNIVERSAL SINGLE DOOR ROUGH-IN DETAIL
SCALE: NTS NOTE: FOR ROUGH-IN ONLY

CAMERA #	DATA CLOSET	CAMERA TYPE	MOUNTING STRUCTURE	LOCATION	VIEW	NOTES
N1-002	IT ROOM - D305	RIO	DROP TILE	LOBBY WAITING - 122	LOBBY WAITING - 122 AND INTERCOM	
N1-003	IT ROOM - D305	RIO	DROP TILE	DAY REPORT OFFICE - 120	DAY REPORT OFFICE - 120	
N1-004	IT ROOM - D305	RIO	SECUREDEK	SECURE CORRIDOR	SECURE CORRIDOR	
N1-005	IT ROOM - D305	RIO	SECUREDEK	ATTORNEY PAPER PASS - 118D	ATTORNEY PAPER PASS - 118D	
N1-006	IT ROOM - D305	RIO	SECUREDEK	ACC ATTORNEY VISIT - 118B	ACC ATTORNEY VISIT - 118B	
N1-007	IT ROOM - D305	RIO	SECUREDEK	ACC INMATE VISIT - 118A	ACC INMATE VISIT - 118A	
N1-008	IT ROOM - D305	RIO	SECUREDEK	STAFF PAPER PASS - 126B	STAFF PAPER PASS - 126B	
N1-009	IT ROOM - D305	RIO	SECUREDEK	INMATE VISIT - 119A	INMATE VISIT - 119A	
N1-010	IT ROOM - D305	RIO	SECUREDEK	INMATE VISIT - 119B	INMATE VISIT - 119B	
N1-011	IT ROOM - D305	RIO	SECUREDEK	ATTORNEY VISIT - 119C	ATTORNEY VISIT - 119C	
N1-012	IT ROOM - D305	RIO	SECUREDEK	ATTORNEY VISIT - 119D	ATTORNEY VISIT - 119D	
D1-013	IT ROOM - D305		SECURITY DECK	OBSERVATION - 118	OBSERVATION - 118	PTZ, PATCH AND REPAINT
D1-014	IT ROOM - D305		SECURITY DECK	INMATE VISIT - 119	INMATE VISIT - 119	PTZ, PATCH AND REPAINT

7 CAMERA SCHEDULE
SCALE: NS NOTE: FOR ROUGH-IN ONLY

GENERAL NOTES:

1. SCHEDULE IS FOR REFERENCE ONLY AND SHOULD NOT BE USED FOR COUNTS. THE CONTRACTOR SHALL VERIFY EACH CAMERA LOCATION WITH THE FLOOR PLANS.

4/7/2016 9:42:08 AM
This document may be an electronic file or may be printed from an electronic file provided to the user. It is the sole responsibility of the user to ensure that the content and quality is consistent with the content and quality of the paper document on file at BWBR.

HUBER CENTER
VISITATION AREA REMODEL
St. Croix Country Jail
Hudson, Wisconsin

380 St. Peter Street, Suite 600
Saint Paul, MN 55102
651.222.3701 bwbr.com

elert & associates
140 Third Street South
Stillwater, MN 55082
651.430.2772 fax: 651.430.2661

Issued for	Date
95 % CD	04/15/16
100 % CD	04/25/16

Drawn JM
Checked BF

Date 04/25/16
Comm. No. 3.2015141.01

Sheet Title
SECURITY - DETAILS AND SECURITY SCHEDULES

Sheet No.
SC500

Copyright BWBR